Project_____Consultant_____Model Number_____Item Number_____

# ITSD - Integrated Towel & Soap Dispenser

**SPECIFICATION:**

**ITSD Model** Integrated Combination Towel & Soap Dispenser is constructed of 18-gauge #304 stainless steel, fully enclosed on sides, top and bottom. All corners are fully welded and polished smooth. Unit to be secured to backsplash of IMC hand sink. Hinged door with optional lock provides access for replenishing towels and soap.

**PRODUCT GUIDE:**

Exclusive unitized design is suitable for all hand wash areas, providing convenient access to soap and towels at the sink.

Located immediately above the hand sink, there are no spills or excuses from service staff. Compact size with a large capacity makes it suitable for every hand wash or sink station.

Towel dispenser holds 400 standard multifold paper towels and the soap dispenser has a 28 oz. (0.83l) capacity.

Consumables are easily replenished and kept secure behind a lockable door.

**OPTIONS:**

- ☐ Security/Correctional design
- ☐ Stand-alone wall mounting
- ☐ Keyed tumbler lock

*Price Page 66

Specifications subject to change without notice.

IMC/TEDDY
FOOD SERVICE EQUIPMENT

P.O. Box 206
Copiague, NY 11726-0206

800-221-5644/631-789-8881
Fax: 631-789-3633

www.imcteddy.com

# ITSD - Integrated Towel & Soap Dispenser

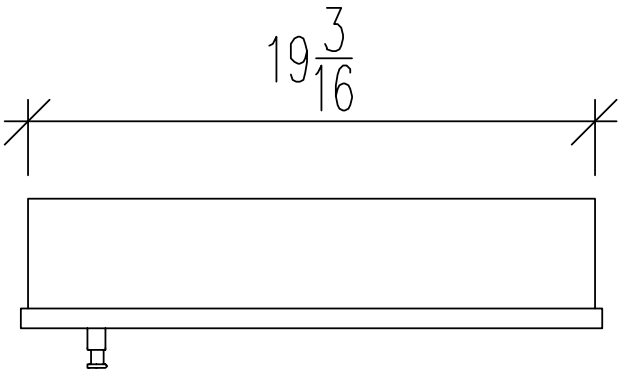


PLAN

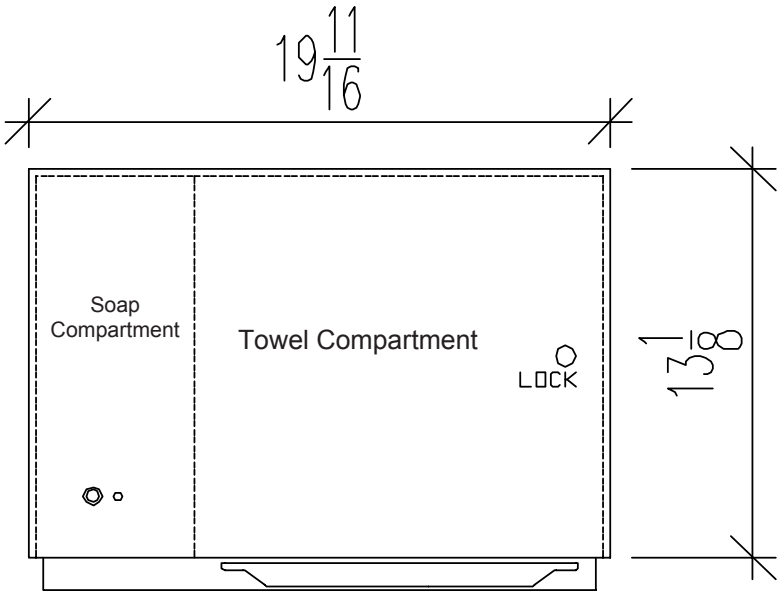


ELEVATION

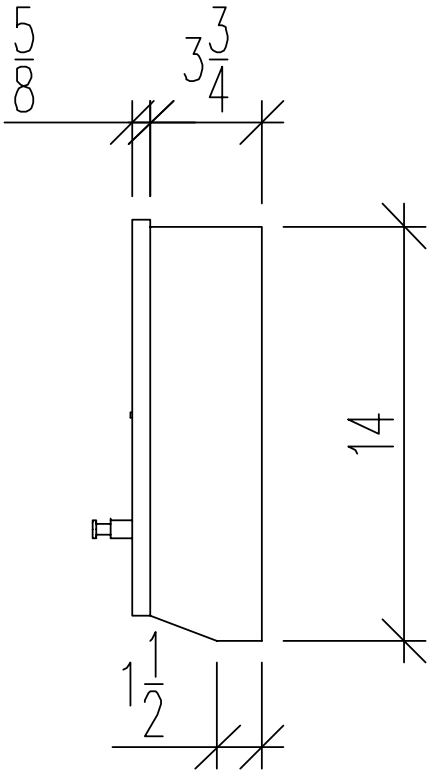


RIGHT

Specifications subject to change without notice.

IMC/TEDDY
FOOD SERVICE EQUIPMENT

P.O. Box 206
Copiague, NY 11726-0206

800-221-5644/631-789-8881
Fax: 631-789-3633

www.imcteddy.com