FOODSERVICE EQUIPMENT
CATALOG
HEALTHCARE

EQUIPMENT PREFERENCE INC

WWW.EPIKITCHEN.COM | 2255 STONE MYERS PKWY, STE 105, GRAPEVINE, TX 76051 | PHONE 817-552-5500

TABLE OF CONTENT

PAGE 3-5

RECEIVING/STORAGE

Shelving
Carts
Security Cages
Racks

PAGE 6-9

REFRIGERATION

Refrigerators & Freezers
Walk-In Coolers
Remote Refrigeration

PAGE 10-13

FOOD PREPARATION

Slicers
Mixers
Food Processors

PAGE 14-21

COOKING/HOT HOLDING

Combi / Convection Ovens
Speed Ovens / Conveyor Ovens
Steam Cooking

PAGE 22-29

SERVING

Serving Counters
Carts & Kiosks
Merchandisers

PAGE 30-35

WAREWASH/WASTE

Dishmachines
Food Waste Disposers
Faucets
Cleaning Supplies

HEALTHCARE
RECEIVING & STORAGE

SCAN QR CODE TO VIEW INTERACTIVE CATALOG OR GO TO
https://www.epikitchen.com/healthcare-catalog

RECEIVING/STORAGE

1. EAGLE MASTER TRAK® OVERHEAD TRACK SHELVING
2. NEW AGE CANTILEVER SHELVING
3. NEW AGE SLIDING SECURITY FENCE
4. EAGLE WIRE SHELVING
5. EAGLE FULL SIZE SECURITY UNIT
6. IMC/TEDDY SECURITY WALL CABINET
7. IMC/TEDDY STORAGE CABINET CMSC-R

RECEIVING/STORAGE

1

2

3

4

5

6

7

1. NEW AGE PAN RACK #1331
2. NEW AGE CUSTOM PICKING CARTS #DWG99249
3. NEW AGE HEAVY DUTY FIRST-IN, FIRST-OUT CAN RACKS #97294CK
4. NEW AGE FOLDING CART #95241
5. EAGLE STAINLESS STEEL UTILITY CART #UC-311
6. EAGLE BLACK POLYMER UTILITY CART #EU3-2030-P
7. NEW AGE LIFETIME SERIES DUNNAGE RACKS #4004

HEALTHCARE **REFRIGERATION**

SCAN QR CODE TO VIEW INTERACTIVE CATALOG OR GO TO
https://www.epikitchen.com/healthcare-catalog

REFRIGERATION

WALK-INS & UPRIGHT REFRIGERATION

1. AMERICAN PANEL WALK-INS
2. AMERICAN PANEL DESIGNER COLOR OPTIONS
3. TRAULSEN R&A SERIES REFRIGERATORS
4. TRAULSEN R&A SERIES #RHT232WPUT-HHG
5. RDT ZS REFRIGERATION SERIES WITH ECO SMART REMOTE MONITORING & SYSTEM CONTROL

REFRIGERATION

BLAST CHILLERS & UNDERCOUNTER

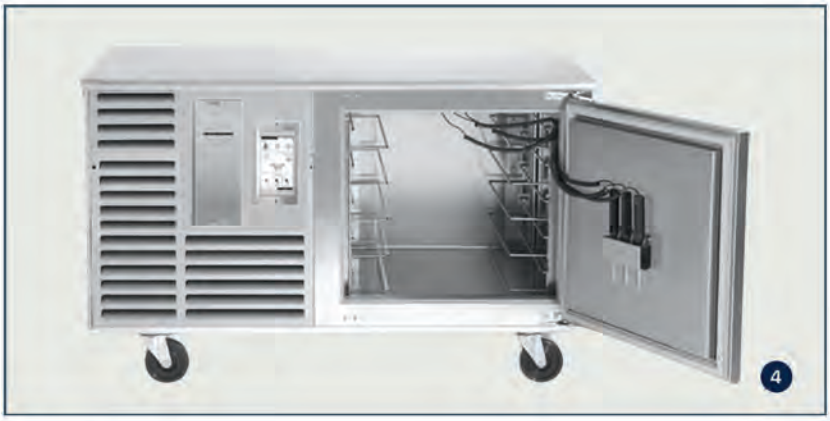

1. AMERICAN PANEL BLAST CHILLER #AP20BC200-2
2. TRAULSEN BLAST CHILLER TBC SERIES
3. AMERICAN PANEL BLAST CHILLER # AP3BCF30-1-P
4. TRAULSEN UNDERCOUNTER BLAST CHILLER TBC5
5. CENTERLINE™ UNDERCOUNTER REFRIGERATORS AND FREEZERS

REFRIGERATION

EQUIPMENT STANDS & PREP TABLES

1. TRAULSEN FREEZER EQUIPMENT STAND #TE072HT
2. TRAULSEN TS FULL SIZE PREP TABLE #TS048HT
3. CENTERLINE™ PREP TABLE MEGATOP #CLPT-7230
4. TRAULSEN COMPACT SANDWICH PREP TABLE #UPT4812
5. CENTERLINE™ COMPACT MEGA TOP PREP TABLE #CLPT-4818-DW

HEALTHCARE **FOOD PREPARATION**

SCAN QR CODE TO VIEW INTERACTIVE CATALOG OR GO TO
https://www.epikitchen.com/healthcare-catalog

FOOD PREPARATION

1. NEW AGE SLICER STAND #98000
2. HOBART LEGACY MIXERS #HL600
3. NEW AGE MIXER STAND #99738
4. HOBART HS SERIES SLICER #HS7
5. HOBART CONTINUOUS FEED FOOD PROCESSOR #FP150
6. HOBART BUFFALO CHOPPER #84146

FOOD PREPARATION

1. EAGLE CUSTOM CHEFS STATION
2. EAGLE WORK TABLE WITH HINGED DOORS #T3036BA-BS-HGD
3. EAGLE SPEC MASTER PREP TABLE #PT 3072
4. HATCO HOT WATER DISPENSER #AWD-12
5. DOUGHXPRESS DUAL HEAT PRESS #D-TXM-2-18W
6. EAGLE OVERSHELF SYSTEM FOR STAINLESS STEEL WORKTABLES

FOOD PREPARATION

KNIVES & ACCESSORIES

DEXTER

COOL BLUE® HIGH HEAT UTENSILS

DEXTER

DEXTER 360® SERIES

DEXTER

SANI-SAFE® SERIES

DEXTER

V-LO® SERIES

DEXTER

SOFGRIP® SERIES

DEXTER

PIZZA CUTTERS

DEXTER

SHARPENERS

DEXTER

TURNERS

HALTHCARE
COOKING & HOLDING

SCAN QR CODE TO VIEW INTERACTIVE CATALOG OR GO TO
https://www.epikitchen.com/healthcare-catalog

COOKING

OVENS & RANGES

VULCAN

CONVECTION OVEN (DOUBLE STACKED) #VC44GD

BAXTER

BAXTER MINI ROTATION RACK OVEN #OV310

VULCAN

36" HD RANGE, OVEN AND CHARBROILER #60SC-4B36CB

VULCAN

HD RANGE V4B36S

COOKING

RANGES, GRIDDLES & CHABROILERS

1

2

3

4

5

1. VULCAN ENDURANCE™ SERIES STAINLESS STEEL 60" GAS RANGE WITH 6-30,000 BTU BURNERS, 24" GRIDDLE, STANDARD OVEN AND REFRIGERATED BASE #60RS-24GT6B
2. VULCAN NON-STICK CLAMSHELL ACCESSORY FOR RESTAURANT GRIDDLES #VMCS-101 (SHOWN ON GRIDDLE #VCCG24)
3. VULCAN ACHIEVER 60" RESTAURANT CHARBROILER, COUNTERTOP #VACB60
4. VULCAN ACHIEVER 24" HEAVY DUTY GAS HOT PLATE, COUNTERTOP #VHP424
5. VULCAN HEAVY DUTY GAS GRIDDLE, COUNTERTOP #MSA36

COOKING

COMBI OVENS

RATIONAL

ICOMBI PRO #10-1

NEW

VULCAN

CORE COMBI

AVAILABLE Q1 2025

RATIONAL

ICOMBI PRO DOUBLE STACK

NEW

VULCAN

CHEF COMBI

AVAILABLE Q1 2025

COOKING
STEAM

VULCAN
28 GALLON PRECIPAN #VPP28E

VULCAN
STEAMER CONVECTION STEAMER #C24ET10 LWE

RATIONAL
IVARIO PRO 2-S

VULCAN
ELECTRIC BOILERLESS COUNTERTOP STEAMER C24E05
(SHOWN ON EQUIPMENT STAND)

COOKING

COOKSUITES

VULCAN

HEAVY DUTY COOKSUITES WITH OVEN, RANGE, GRIDDLE, CARBROILER AND FRYER

VULCAN

MODSUITE FRAME

VULCAN

MODSUITE WITH EQUIPMENT

COOKING

SPEED OVENS, CONVEYORS, FINISHERS

1

2

3

4

5

6

1. OVENTION MATCHBOX® CONVEYOR OVEN 1718/1313
2. OVENTION SPEED OVEN #MIL02-16
3. OVENTION MICROWAVE SPEED ASSIST OVEN #MISA®-A12
4. OVENTION SHUTTLE® CONVEYOR AND A CLOSED-CAVITY OVEN
5. OVENTION CONVEYOR #C2000
6. IBEX HIGH SPEED OVEN #IBEX1AV1PBB

COOKING

FRYERS

1. VULCAN POWERFRY FRYER #2VK45CF (COMPUTER CONTROLS WITH FILTRATION)
2. VULCAN 70LB POWERFRY3™ TR SERIES GAS COMMERCIAL DEEP FRYER #TR65
3. VULCAN 90LB GR SERIES GAS FREESTANDING FRYER - LARGE CAPACITY #GR85
4. VULCAN 75LB CEF SERIES ELECTRIC COUNTER FRYER MODEL #CEF75
5. VULCAN FRYMATE™ ELECTRIC FRY DUMP & HOLDING STATION #FRYMATE VX21S
6. VULCAN QUICKFRY DEEP FRYER #1VHG50AF (ANALOG WITH FILTRATION)
7. VULCAN MOBILE FRYER FILTRATION SYSTEM #MF-1

HEALTHCARE
SERVING

SCAN QR CODE TO VIEW INTERACTIVE CATALOG OR GO TO
https://www.epikitchen.com/healthcare-catalog

SERVING

CUSTOM SERVING COUNTERS

SERVING

CUSTOM SERVING COUNTERS

SERVING

MODULAR SERVING COUNTERS

SERVING

HOT COLD FREEZE & FOOD WELLS

MERCHANDISE HOT FOOD NEXT TO COLD FOOD

1. DUKE HOT COLD FREEZE
2. HATCO HEATED WELL #HWBI-3MA
3. DUKE WATERLESS HEATED WELL
4. EAGLE HOT WELL TABLE #SPHT4-240-3

SERVING

HOLDING & MERCHANDISERS

1. VULCAN INSTITUTIONAL SERIES HEATED CABINET & PROOFER #VBP15ES
2. VULCAN NON-INSULATED HOLDING CABINET #VP18
3. VULCAN DOUBLE STACKED COOK AND HOLD OVEN WITH 16 PAN CAPACITY #VCH88
4. HATCO FREESTANDING DRAWER WARMER #HDW-X
5. VULCAN COOK & HOLD OVEN #VCH16
6. HATCO FLAV-R-SAVOR® PORTABLE ENERGY EFFICIENT HOLDING CABINET #FSHC-7W-EE
7. TRAULSEN TWO DOOR HEATING CABINET #G2A353P

SERVING

HOLDING, TOASTERS, MERCHANDISERS & LOCKERS

1. HATCO TOAST-QWIK CONVEYOR TOASTER #TQ800
2. PRINCE CASTLE SLIM-LINE VERTICAL CONTACT TOASTER #297-T9
3. HATCO GLO-RAY® PORTABLE HEATED SHELF
4. HATCO FREESTANDIN DRAWER WARMER #HDW-X
5. RPI HOT VARIO MERCHANDISER
6. HATCO FLAV-R-SAVOR® HEATED AIR CURTAIN CABINET #FS3HAC
7. HATCO MINNOW PICKUP POD #MPP
8. HATCO GLO-RAY® DESIGNER MERCHANDISING WARMER #GR2SDS-XXD

SERVING
MERCHANDISERS

1. RPI OLYMPUS AIR SCREEN MERCHANDISER
2. RPI OLYMPUS PORTE CACHEE AIR SCREEN SCAS-V-PD
3. RPI OLYMPUS VI AIR SCREEN OPEN MERCHANDISER SCAS-48R-V
4. RPI WARM AND AMBIENT HOT VARIO MERCHANDISER

HEALTHCARE
WAREWASH

SCAN QR CODE TO VIEW INTERACTIVE CATALOG OR GO TO
https://www.epikitchen.com/healthcare-catalog

WAREWASH

DISHMACHINES

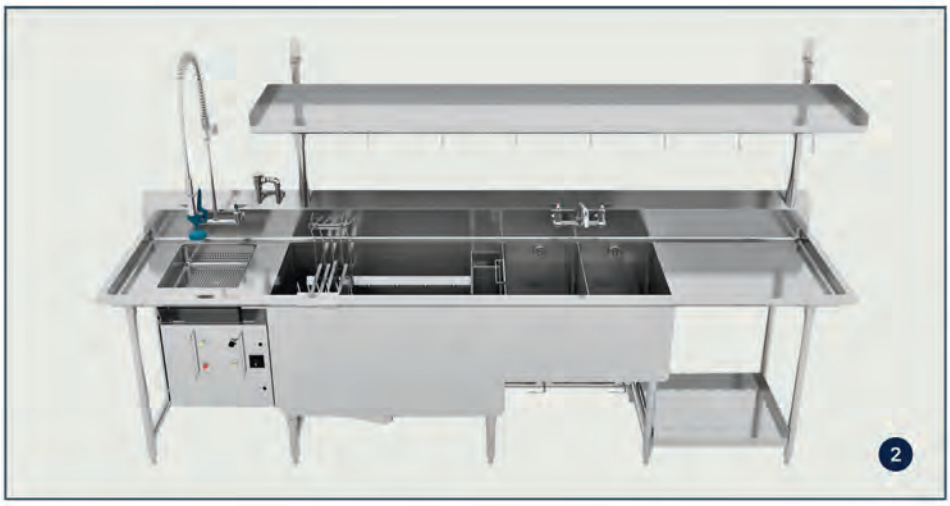

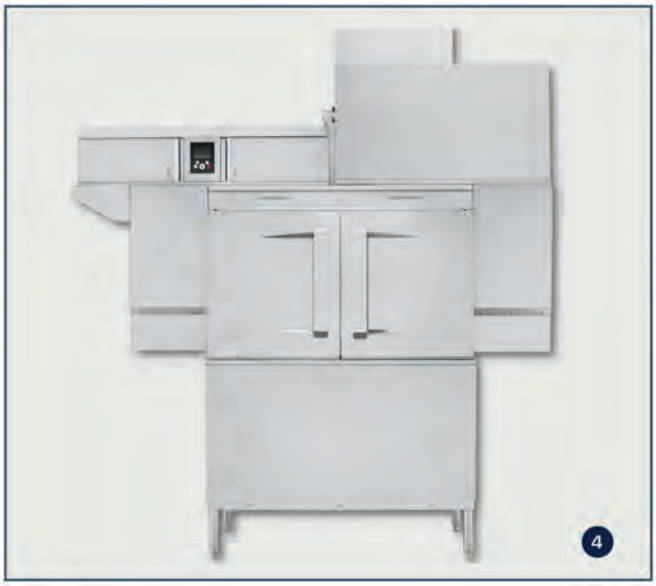

1. HOBART FLIGHT TYPE DISHMACHINE FT1000E
2. AEROWERKS ULTRAWASH SINK
3. HOART LXN BASE TWO-LEVEL UNDERCOUNTER DISHWASHER
4. HOBART CONVEYOR TYPE DISHMACHINE #CL44VL

WAREWASH

DISHROOM LAYOUTS & SOILED TRAY HANDLING SYSTEM

WAREWASH

DISPOSALS & WASTE REDUCTION SYSTEMS

SOMAT

WASTE REDUCTION PULPING SYSTEM #SPC-75S

SOMAT

WASTE DEHYDRATOR #DH 100W

INSINKERATOR

POWERRINSE WASTE COLLECTION SYSTEM

INSINKERATOR

FOOD DISPOSAL SS-SERIES, WATER SAVING PANEL #AS-101

WAREWASH

SINKS & FAUCETS

IMC/TEDDY

WALL MOUNTED HAND SINK WS-SEC

INSINKERATOR

INSTANT WARM HANDWASH

IMC/TEDDY

UTILITY SINK FS-H

T&S

FAUCETS

T&S

ULTRARINSE #B-0231-U12

T&S

DURAPULL PRE RINSE #B-5125-12-CRB8P

T&S

BANQUET FILLERS #S-0113-BJ

T&S

FOOT VALVES

T&S

GAS CONNECTOR

CLEANING SUPPLIES

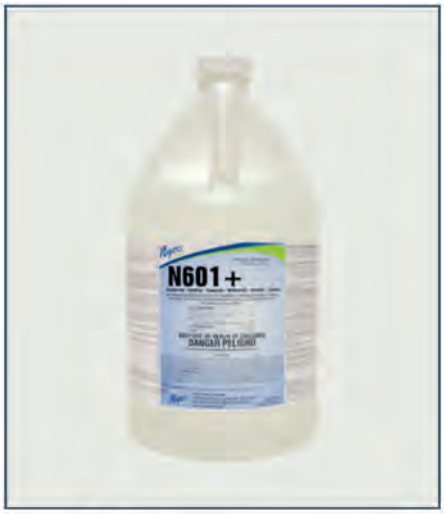

NYCO
N601+ DISINFECTANT

NYCO
TABLE TIME

NYCO
MARVALOSA

SCOTCH-BRITE
QUICK CLEAN GRIDDLE CLEANING SYSTEM

SCOTCH-BRITE
STAINLESS STEEL HOOD DEGREASER WIPES

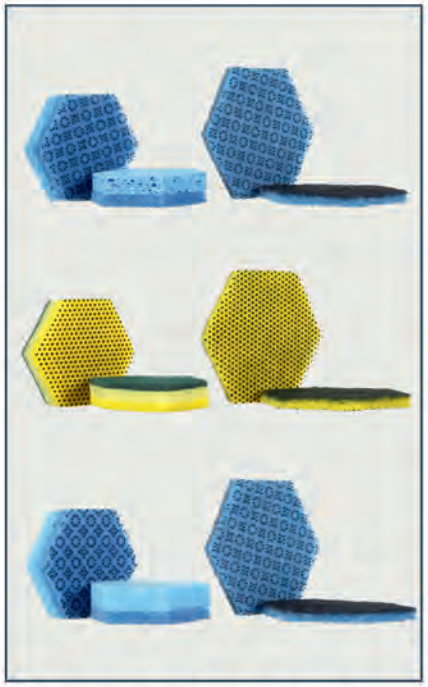

SCOTCH-BRITE
HEX SCOUR PADS, 2000HEX, 3000HEX, 96HEX

Scan QR Code for EPI Linelist or go to
www.epikitchen.com-linelist

EQUIPMENT PREFERENCE INC.
WWW.EPIKITCHEN.COM
817-552-5500