PERLICK®

COMMERCIAL

2025 Century System Catalog

Milwaukee

+ PRICING EFFECTIVE 07/01/2025
Prices subject to change without notice

800.558.5592

perlick.com

GET THE BEER RIGHT

At the heart of your entertainment system is the perfect glass of beer.

It matters to the experience you provide, and ultimately, to your bottom line.

Whether you're opening a new bar or restaurant or planning for a large venue, every decision you make matters, and one thing is for sure, you need to get the beer right.

WE KNOW BEER

Our **Century Systems** are custom designed and engineered to deliver a consistently perfect glass of beer every time — perfect to the taste buds and perfect to your pocket. We guarantee that every glass of every type of beer is served at its optimal temperature with more beer and the correct amount of foam.

INCREASE CUSTOMER APPEAL, INCREASE ORDERS, AND INCREASE PROFITS WITH THE PERFECT POUR

ALLOWS FOAM TO HELP RELEASE REFRESHING BEER AROMA

CREATES MORE YIELD OUT OF EVERY KEG

TABLE OF CONTENTS

Form No. 70164
07.31.25

GLYCOL COOLED DISPENSING SYSTEMS

Avenue T-Pipe and H-Pipe Towers 8–10
Brew Pipe Towers – L Shape 11
Brew Pipe Towers – T Shape 11
Brew Pipe Towers – Pass-Thru 12
Tee Towers – Single Base 13
Tee Towers – Wide Base & Extra High 14
Bridge Towers – Dual & Triple Base & Extra High 15
Bridge Towers – Back to Back 16
Extra High Back to Back Bridge Towers 17
Winged Tee Towers 18
Winged Bridge Towers 19
Illuminated Winged Tee Towers 20
Illuminated Winged Bridge Towers 21
Polished Chrome Brew Pipe Towers 22
Pipe Tower – Pass Thru 23
Draft Arms
3″ O.D & Extra High Draft Arms – 3″ O.D. 24
4″ O.D. 24
Lucky & Panther Towers 26
Lucky, Panther & Sexy Drip Pans 26
Cobra, Sexy & Napoli Towers 27
Gambrinus Towers 28
Torino Towers 28
Roma Towers 29
Wall Mount Dispensing Heads 30
Spacesaver Underbar Heads 30
Modular Wall Mount Dispensers 31–32

Drip Pans
Top Mounted with Glass Rinser on Center, Glass Rinser on End, & Offset on Center 33
Top Mounted Bevel Edge 33
Top Mounted 34
Recessed 34
Cutout 35
Angled 35
Lucky, Panther & Sexy Drip Pans 35
Glass Rinser with Drainer 35
Drip Pan Accessories 35

Trunk Housing and Accessories
Basic Trunk Housing 37
Additional Beverage Lines 37
Trunk Housing Branch Connection 38
Splice Kit 38
Trunk Housing Tape 38
Trunk Housing With Heat Resistant Jacketing 38
Trunk Housing Accessories 38

Draught Guard Unit 39

Century Series Power Paks / Accessories
Air-cooled Power Paks – for Copper Coolant Lines 40
Water-cooled Power Paks – for Copper Coolant Lines 40
Coolant Connector Kit 41
Glycol 41
Miscellaneous Power Pak Accessories 41
Stacking Modular Equipment Racks 41
Second Year Extended Parts and Labor Warranty 41

ArcticPour Power Paks / Accessories
Split Deck Power Pak & Refrigeration Decks 43
ArcticPour Stands, Racks & Shelves 43
Miscellaneous ArcticPour Accessories 43
Glycol Bath Options 44

Blenders / N2 Generators
McDantim's TruMix CO2-Nitrogen Blender 45
Beer Blast Nitrogen Generator 45

AIR-COOLED DISPENSING SYSTEMS

Walk-in Cooler Dispensing Systems 46
Air-Cooled System Options 47

Air-Cooled Dispensing Towers
Through-the-Wall Tapping 48
Modular Wall Mount Dispenser 49
Modular Wall Mount Dispenser Accessories 50
Direct Mount Kit with Blower 51
Blind Mount & Long Draw Mount Kit 52
Dual Air Shaft Systems 53
Tee Towers – Single Base 54
Draft Arms 3″ O.D. & Extra High Draft Arms 3″ O.D. 55

BEVERAGE SYSTEM ACCESSORIES

Faucets, Shanks / Accessories 56
Forward Sealing Beer Faucets 57
Additional Faucets and Accessories 57
Growler Filler Tube 57

Tobin Ellis Signature Draft Cocktail System
Introduction 58
Long Draw Draft Cocktail Dispensing Kits 61
Draft Cocktail Components & Kits 61

Regulator Panel Kits / Accessories
Regulator Panel Kits – Locking / Non-Locking 62
Keg Couplers 62
Tailpiece Conversion Parts Bag 62
Regulator Panel Kits with FOBs – Locking / Non-Locking 63
Regulators 63
Beer Pump Panel Guard 63

Beer Pump Panel Kits / Accessories
Beer Pump Panel Kits – Locking / Non-Locking 64
CO2 Detector 65
Manifolds, 2- and 3-Outlet 65
In-Line Gas Leak Detector 65

Tubings, Fittings / Accessories 66–69

TERMS AND CONDITIONS

Terms and Conditions 70
Century Performance Guarantee 74

BALANCE & PROFIT

IT'S IN THE DETAILS

A system that works in harmony is the key to consistently pouring the perfect glass of beer. Perfect balance in temperature and pressure from the cooler to the tap determines the quality of the beer you pour and the profit you put in your pocket.

WHY CHOOSE PERLICK?

Details matter, and we pay attention to every one of them. Every beer dispensing system is different. Whether it's a traditional glycol-cooled system or a modern air-cooled system, we don't rely on guesswork or assumptions to build the right solution to meet your needs. We use our expertise to custom engineer your beer dispensing system at our factory to perform flawlessly, in perfect balance, from the moment we install it — with no surprises.

EXPERIENCE THE CENTURY DIFFERENCE

Century beverage systems offer superior tower construction, faucets and cooling technology. Our systems are factory engineered, installed by a certified installer, and backed by a ***Certified Century Performance Guarantee*** ensuring customers receive the perfect pour from Perlick.

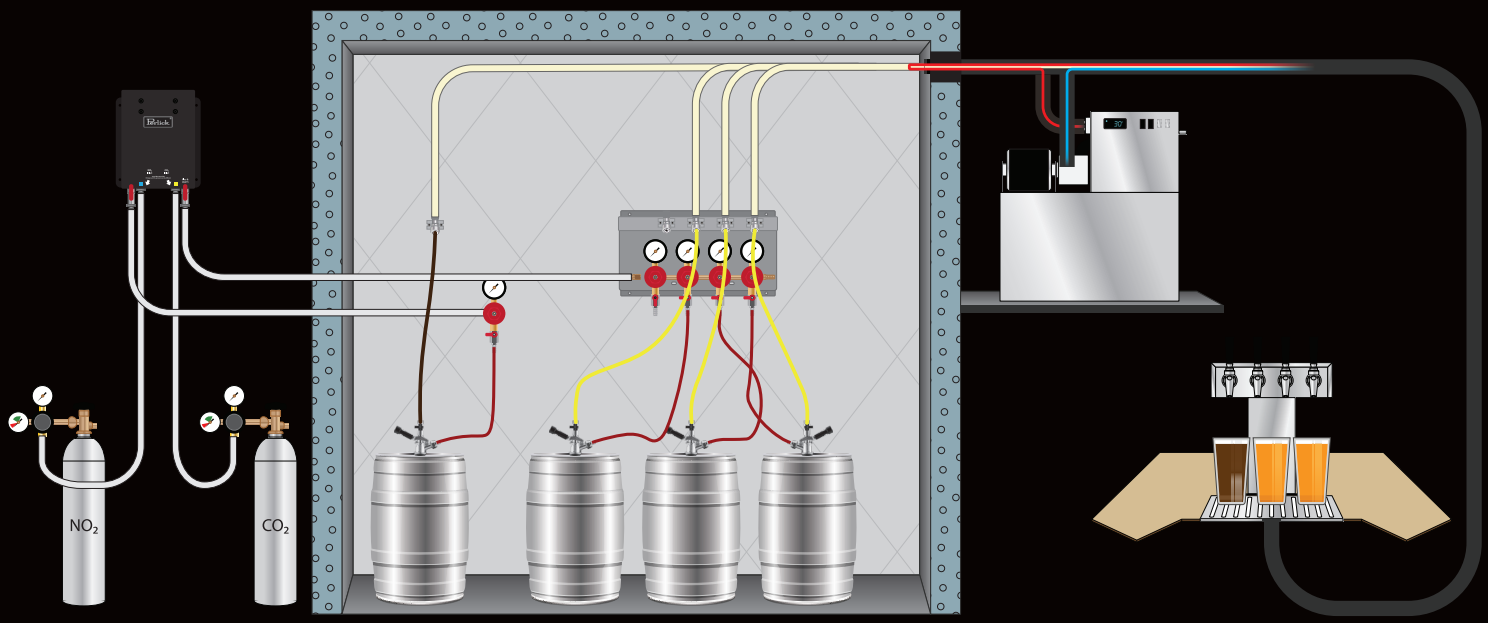

- **CUSTOM BUILT AT THE FACTORY**
  The Perlick Century Beer System is the only remote beer dispensing system that is custom built at the factory for each and every job.

- **POWER PAKS**
  The Perlick Power Pak comes with a stainless steel exterior, stainless steel glycol reservoir, and electronic temperature control system which includes digital readouts of the glycol temperature. Available in air-cooled or water-cooled configurations.

- **MADE WITH ONLY THE FINEST MATERIALS**
  Using special polyethylene beverage tubing, each beer line is number-coded and runs continuous and unspliced all the way to the dispensing head. This special tubing will not impart any taste to the product.

- **PURE COPPER COOLANT LINES**
  Copper coolant lines provide even heat transfer. Each beer line is tapped to a pure copper coolant line for the entire length of the trunk housing to help keep beer cold.

- **CUSTOM-BUILT DISPENSING HEADS**
  Perlick manufactures an extensive line of dispensing heads in a variety of eye-catching styles built exclusively for the Century Beer System. Polyfoam insulation ensures that beer is cooled right up to the faucet, eliminating foam-producing hot spots, which waste beer and slow service.

NOTE: Parts cannot be individually purchased and cannot be used with other manufacturer's components.

MAKE A BOLD STATEMENT

There is nothing ordinary about our standard tower configurations. We offer more standard products, exclusive faucets, and proprietary towers built to more demanding requirements than anyone. We have styles to fit virtually every decor, theme, concept, and dispensing need, and every item we make comes with the same legendary Perlick guarantee.

COMPONENTS DESIGNED FOR QUALITY.
BEVERAGE DISPENSING SOLUTIONS BUILT TO PERFORM.

WHAT SETS PERLICK APART?

Perlick's heat exchanger is robust and superior to the competition

- Cast block includes the coolant loop and beverage lines to ensure beverages are poured at the perfect temperature

Insulation is dense and fills the entire tower body

- Foam insulation is injected into the tower and fully surrounds the heat exchanger and beverage lines to minimize sweating, keep the bar clean and dry, and prevent beverage temperature changes

Durable construction

- Engineered for durability and reliability with premium materials

Dense foam insulation injected into the tower to surround the heat exchanger

PERLICK®

AVENUE PIPE TOWERS

The simple, clean lines of the Avenue Tower offer a design that easily adapts to any space.

Chase Center arena approached Perlick to design and build a new, stylish tower for them, and our engineers came through with another beautiful product to add to our always-growing line of beverage dispensing equipment.

HENNESSY BAR – CHASE CENTER UPPER CONCOURSE
PHOTO COURTESY OF JASON O'REAR/CHASE CENTER

Perlick offers a wide range of tower configurations
- Towers available in glycol- or air-cooled models
- Choose from towers that fit small spaces to statement pieces that dispense dozens of beverages

Designs that fit any space
- Traditional, transitional, or contemporary – choose from aesthetics that fits any space

Superior insulation
- Minimal tower sweat and best-in-industry cooling performance

Quality design and craftsmanship
- Premium materials that are durable and look great for years
- Tight seams and hidden fasteners are easy to clean and offer superior designs

AVENUE T-PIPE TOWER
See pg. 10

AVENUE H-PIPE TOWER
See pg. 10

Many towers available in single- or two-hole installation
- Fits a wide range of layouts

- The modern, clean design of the **Avenue Tower** makes it a great fit for any bar
- Engineered for durability, the stainless steel design will last for years
- Perlick's superior heat exchanger and insulation guarantee a perfect pour

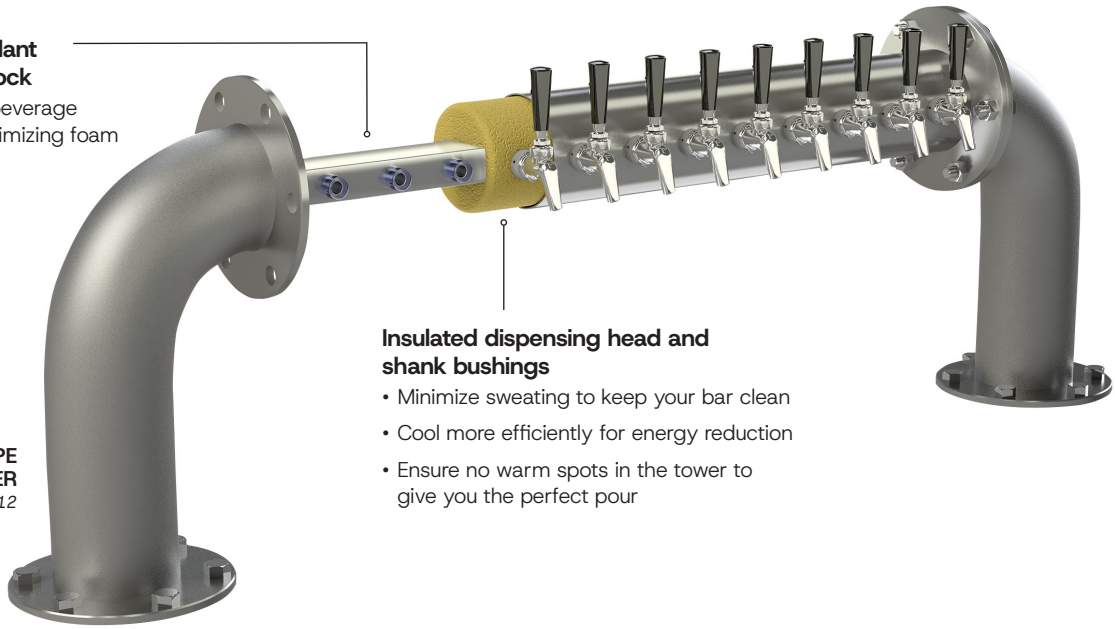

Pure copper coolant lines and cold block
- Maintain chilled beverage temperature, minimizing foam and lost profits

Insulated dispensing head and shank bushings
- Minimize sweating to keep your bar clean
- Cool more efficiently for energy reduction
- Ensure no warm spots in the tower to give you the perfect pour

BREW PIPE TOWER
See pg. 12

GLYCOL-READY DISPENSING TOWERS

All tower pricing is now inclusive of 630SS* faucets

**630SSTF faucets are included where applicable*

4073-4PO-SS

AVENUE T-PIPE TOWERS

Sophisticated styling in a polished stainless steel body.

All Avenue Towers are NSF certified.

NSF COMPONENT

OPTIONAL MATCHING DRIP PAN – AVENUE T

	No. of Faucets				
Style	**4**	**6**	**8**	**10**	**12**
Top Mounted – 5000 Series	5025	5028	5030	5030	5034
Top Mounted – C18000 Series	C18645A	C18650A	C18655	C18655	C18660
Recessed	C32357	58979	58979	58979	69324

**C18000 Series Drainers are also available with glass rinser. See page 33.*

AVENUE H-PIPE TOWERS

Sophisticated styling in a polished stainless steel body.

All Avenue Towers are NSF certified.

NSF COMPONENT

POLISHED STAINLESS STEEL

Part No.	No. of Faucets	Overall Width	Overall Height	Faucet Height	Faucet Centers	List Price
4072-6PO-SS	6	27″	15-5/8″	13-1/2″	3″	$4,057.00
4072-8PO-SS	8	31″	15-5/8″	13-1/2″	3″	$4,236.00
4072-10PO-SS	10	37″	15-5/8″	13-1/2″	3″	$4,332.00
4072-12PO-SS	12	43″	15-5/8″	13-1/2″	3″	$4,564.00
4072-14PO-SS	14	49″	15-5/8″	13-1/2″	3″	$5,625.00
4072-16PO-SS	16	55″	15-5/8″	13-1/2″	3″	$6,088.00

4072-8PO-SS

OPTIONAL MATCHING DRIP PAN – AVENUE H

	No. of Faucets					
Style	**6**	**8**	**10**	**12**	**14**	**16**
Top Mounted – 5000 Series	5025	5028	5030	5030	5034	5036
Top Mounted – C18000 Series	C18645A	C18650A	C18655	C18658	C18660	C18663
Recessed	C32357	58979	58979	58979	69324	69327

**C18000 Series Drainers are also available with glass rinser. See page 33.*

4062-6L

BREW PIPE TOWERS – L SHAPE

Features schedule 5, 304L stainless steel pipe creating a very durable tower with an industrial look in an "L" shape.

BEAD BLAST STAINLESS STEEL – LEFT MOUNT

Part No.	No. of Faucets	Overall Length	Overall Height	Faucet Height	Faucet Centers	List Price
4062-6L	6	28-3/4"	17-3/4"	13-15/16"	3"	$7,102.00
4062-8L	8	34-11/16"	17-3/4"	13-15/16"	3"	$7,649.00
4062-10L	10	40-5/8"	17-3/4"	13-15/16"	3"	$8,301.00

BEAD BLAST STAINLESS STEEL – RIGHT MOUNT

Part No.	No. of Faucets	Overall Length	Overall Height	Faucet Height	Faucet Centers	List Price
4062-6R	6	28-3/4"	17-3/4"	13-15/16"	3"	$7,102.00
4062-8R	8	34-11/16"	17-3/4"	13-15/16"	3"	$7,649.00
4062-10R	10	40-5/8"	17-3/4"	13-15/16"	3"	$8,301.00

OPTIONAL MATCHING DRIP PAN – BREW PIPE L

4062-6L 4062-6R	4062-8L 4062-8R	4062-10L / 10R 4062-10L / 10R
C18750-21	C18750-27	C18750-33

Add -GRC to drainer part number to include a centered glass rinser.

INSTALLATION BOLT KITS

Part No.	Description	List Price
4062-3.5	3-1/2" Bolts	$62.16
4062-4.5	4-1/2" Bolts	$89.36

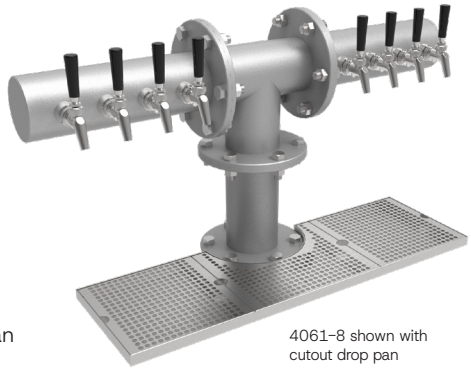

4061-8 shown with cutout drop pan

BREW PIPE TOWERS – T SHAPE

Features schedule 5, 304L stainless steel pipe creating a very durable tower with an industrial look in an "T" shape.

BEAD BLAST STAINLESS STEEL

Part No.	No. of Faucets	Overall Length	Overall Height	Faucet Height	Faucet Centers	List Price
4061-6	6	31-5/16"	17-3/4"	13-15/16"	3"	$9,097.00
4061-8	8	37-5/16"	17-3/4"	13-15/16"	3"	$9,329.00
4061-10	10	43-1/4"	17-3/4"	13-15/16"	3"	$9,666.00
4061-12	12	49-1/4"	17-3/4"	13-15/16"	3"	$10,108.00
4061-16	16	61-1/4"	17-3/4"	13-15/16"	3"	$10,362.00

Installation Bolt Kit required. See prices above.

OPTIONAL MATCHING DRIP PAN – BREW PIPE T

No. of Faucets				
6	8	10	12	16
7020-32	7020-38	7020-44	7020-50	7020-62

UBS ARENA

DISPENSING TOWERS

GLYCOL-READY

4065-12

BREW PIPE TOWERS – PASS-THRU

Features schedule 5, 304L stainless steel pipe creating a very durable tower with an industrial look in a pass-thru style.

BEAD BLAST STAINLESS STEEL – BEER LEADS LEFT

Part No.	No. of Faucets	Overall Length	Overall Height	Faucet Height	Faucet Centers	List Price
4064-6L	6	37-5/8″	17-3/4″	13-15/16″	3″	$8,677.00
4064-8L	8	43-5/8″	17-3/4″	13-15/16″	3″	$8,961.00
4064-10L	10	49-9/16″	17-3/4″	13-15/16″	3″	$9,246.00

BEAD BLAST STAINLESS STEEL – BEER LEADS RIGHT

Part No.	No. of Faucets	Overall Length	Overall Height	Faucet Height	Faucet Centers	List Price
4064-6R	6	37-5/8″	17-3/4″	13-15/16″	3″	$8,677.00
4064-8R	8	43-5/8″	17-3/4″	13-15/16″	3″	$8,961.00
4064-10R	10	49-9/16″	17-3/4″	13-15/16″	3″	$9,246.00

BEAD BLAST STAINLESS STEEL – BEER LEADS BOTH WAYS

Part No.	No. of Faucets	Overall Length	Overall Height	Faucet Height	Faucet Centers	List Price
4065-12	12	55-9/16″	17-3/4″	13-15/16″	3″	$9,688.00
4065-16	16	67-7/16″	17-3/4″	13-15/16″	3″	$10,152.00
4065-20	20	79-7/16″	17-3/4″	13-15/16″	3″	$11,666.00

OPTIONAL MATCHING DRIP PAN – BREW PIPE PASS THRU

4064-6L 4064-6R	4064-8L 4064-8R	4064-10L 4064-10R	4065-12	4065-16	4065-20
C18750-21	C18750-27	C18750-33	C18750-39	C18750-51	C18750-63

Add -GRC to drainer part number to include a centered glass rinser.

INSTALLATION BOLT KITS

Part No.	Description	List Price
4062-3.5	Six 3-1/2″ Bolts	$62.16
4062-4.5	Six 4-1/2″ Bolts	$89.36

GOOD CITY BREWING

CONTACT PERLICK FOR ALL YOUR CUSTOM TOWER NEEDS.

The iconic **Perlick Tee Tower** design makes a bold statement in the bar. With a durable design and superior cooling technology, you can be sure every pour will be perfect. Tee Towers are available in stainless steel, polished chrome or tarnish-free brass with the option of tall and extra tall heights.

4006-6B

4006-6BTF

TEE TOWERS

Tee Towers are constructed from stainless steel and are also available in polished chrome and tarnish-free brass finishes.

All Tee Towers are NSF certified.

NSF COMPONENT

STAINLESS STEEL

Part No.	Number of Faucets	Overall Length	Overall Height	Faucet Height	Faucet Centers	List Price
4006-2B	2	9-1/8"	12-15/16"	9-1/2"	5-1/2"	$1,808.00
4006-3B	3	9-1/8"	12-15/16"	9-1/2"	2-3/4"	$1,924.00
4006-4B	4	11-7/8"	12-15/16"	9-1/2"	2-3/4"	$2,040.00
4006-5B	5	14-5/8"	12-15/16"	9-1/2"	2-3/4"	$2,261.00
4006-6B	6	17-3/8"	12-15/16"	9-1/2"	2-3/4"	$2,482.00

POLISHED CHROME

Part No.	Number of Faucets	Overall Length	Overall Height	Faucet Height	Faucet Centers	List Price
4006-2BPC	2	9-1/8"	12-15/16"	9-1/2"	5-1/2"	$1,944.00
4006-3BPC	3	9-1/8"	12-15/16"	9-1/2"	2-3/4"	$2,071.00
4006-4BPC	4	11-7/8"	12-15/16"	9-1/2"	2-3/4"	$2,197.00
4006-5BPC	5	14-5/8"	12-15/16"	9-1/2"	2-3/4"	$2,450.00
4006-6BPC	6	17-3/8"	12-15/16"	9-1/2"	2-3/4"	$2,692.00

TARNISH-FREE BRASS*

Part No.	Number of Faucets	Overall Length	Overall Height	Faucet Height	Faucet Centers	List Price
4006-2BTF	2	9-1/8"	12-15/16"	9-1/2"	5-1/2"	$2,091.00
4006-3BTF	3	9-1/8"	12-15/16"	9-1/2"	2-3/4"	$2,231.00
4006-4BTF	4	11-7/8"	12-15/16"	9-1/2"	2-3/4"	$2,370.00
4006-5BTF	5	14-5/8"	12-15/16"	9-1/2"	2-3/4"	$2,631.00
4006-6BTF	6	17-3/8"	12-15/16"	9-1/2"	2-3/4"	$2,891.00

**These towers come with an increased lead time. Please contact Perlick for current lead times.*

OPTIONAL MATCHING DRIP PAN – TEE TOWERS

	No. of Faucets				
Style	2	3	4	5	6
Top Mounted - 5000 Series	5020	5020	5020	5025	5025
Top Mounted - C18000 Series	C18640A	C18640A	C18640A	C18645A	C18645A
Recessed	C21379A	C21379A	C21379A	C32357	C32357

Add TF to model number for Tarnish-Free Brass finish.
C18000 Series Drainers are also available with glass rinser - see page 33.

WARNING: California Prop 65 Notice
These products may expose you to chemicals including Chromium, which are known to the state of California to cause cancer and birth defects or other reproductive harm. For more information on whether a product in this list contains these chemicals, please refer to the specific product page at **perlick.com**. Or to find out more about Prop 65, go to **P65Warnings.ca.gov.**

DISPENSING TOWERS

GLYCOL-READY

TEE TOWERS – WIDE BASE

All Tee Towers are NSF certified.

4006S8B

STAINLESS STEEL

Part No.	No. of Faucets	Overall Length	Overall Height	Faucet Height	Faucet Centers	List Price
4006S8B	8	22-7/8″	12-15/16″	9-1/2″	2-3/4″	$2,766.00
4006S10B	10	29-13/16″	12-15/16″	9-1/2″	3″	$3,103.00
4006S12B	12	35-3/4″	12-15/16″	9-1/2″	3″	$3,703.00

POLISHED CHROME

Part No.	No. of Faucets	Overall Length	Overall Height	Faucet Height	Faucet Centers	List Price
4006S8BPC	8	22-7/8″	12-15/16″	9-1/2″	2-3/4″	$3,029.00
4006S10BPC	10	29-13/16″	12-15/16″	9-1/2″	3″	$3,418.00
4006S12BPC	12	35-3/4″	12-15/16″	9-1/2″	3″	$4,070.00

4006S8BTF

TARNISH-FREE BRASS*

Part No.	No. of Faucets	Overall Length	Overall Height	Faucet Height	Faucet Centers	List Price
4006S8BTF	8	22-7/8″	12-15/16″	9-1/2″	2-3/4″	$3,407.00
4006S10BTF	10	29-13/16″	12-15/16″	9-1/2″	3″	$3,864.00
4006S12BTF	12	35-3/4″	12-15/16″	9-1/2″	3″	$4,606.00

**These towers come with an increased lead time. Please contact Perlick for current lead times.*

OPTIONAL MATCHING DRIP PAN – WIDE BASE TEE TOWER

	No. of Faucets		
Type	8	10	12
Top Mount – 5000 Series	5028	5030*	5030
Top Mount – C18000 Series	C18650A	C18655	C186558/C18658
Recessed	C32257*	58979*	58979

**Closest fit – verify tower width vs. drainer width during bar layout process*

**Add "TF" to drip pan model number for tarnish-free brass finish.*
***Top Mount C18000 Series drip pan is available with built-in rinser – see page 33.*

EXTRA HIGH TEE TOWERS

To order either standard or wide base tee towers that are higher than standard, add suffix number and additional amount to list price for the head selected. For example, to order a three-faucet, polished chrome tee tower that is 15-9/16″ tall, order part number 4006-3BPC2. See chart below:

Suffix Number	No. of Faucets	Dispensing Head	Additional Height	Overall Height	Faucet Height	Add to List Price
2	All	Tee Tower	2-5/8″	15-9/16″	12-1/8″	$110.00
4	All	Tee Tower	3-3/4″	16-11/16″	13-1/4″	$120.00

WARNING: California Prop 65 Notice
See page 13 for details.

BRIDGE TOWERS – DUAL AND TRIPLE BASE

Bridge Tee Towers are constructed from stainless steel and are also available in polished chrome and tarnish-free brass finishes.

All Bridge Tee Towers are NSF certified.

NSF COMPONENT

STAINLESS STEEL

Part No.	No. of Faucets	Overall Length	Overall Height	Faucet Height	Faucet Centers	List Price
4006-8B	8	33-1/8″	12-15/16″	9-1/2″	4-1/8″	$4,236.00
4006-10B	10	33-1/8″	12-15/16″	9-1/2″	3″	$4,311.00
4006-12B	12	33-1/8″	12-15/16″	9-1/2″	2-3/4″	$4,543.00
4006-16B	16	44-1/8″	12-15/16″	9-1/2″	2-3/4″	$5,532.00
4006-20B	20	55-1/8″	12-15/16″	9-1/2″	2-3/4″	$6,416.00
* 4006-24B	24	71-11/16″	12-15/16″	9-1/2″	3″	$7,195.00
* 4006-30B	30	89-9/16″	12-15/16″	9-1/2″	3″	$8,206.00

4006-12B

POLISHED CHROME

Part No.	No. of Faucets	Overall Length	Overall Height	Faucet Height	Faucet Centers	List Price
4006-8BPC	8	33-1/8″	12-15/16″	9-1/2″	4-1/8″	$4,551.00
4006-10BPC	10	33-1/8″	12-15/16″	9-1/2″	3″	$4,678.00
4006-12BPC	12	33-1/8″	12-15/16″	9-1/2″	2-3/4″	$4,910.00
4006-16BPC	16	44-1/8″	12-15/16″	9-1/2″	2-3/4″	$6,004.00
4006-20BPC	20	55-1/8″	12-15/16″	9-1/2″	2-3/4″	$6,941.00
* 4006-24BPC	24	71-11/16″	12-15/16″	9-1/2″	3″	$7,825.00
* 4006-30BPC	30	89-9/16″	12-15/16″	9-1/2″	3″	$8,836.00

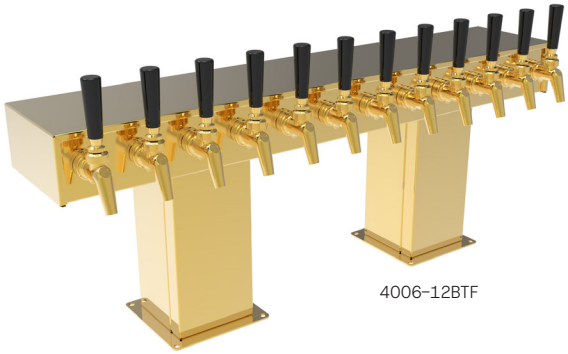

4006-12BTF

TARNISH-FREE BRASS**

Part No.	No. of Faucets	Overall Length	Overall Height	Faucet Height	Faucet Centers	List Price
4006-8BTF	8	33-1/8″	12-15/16″	9-1/2″	4-1/8″	$4,908.00
4006-10BTF	10	33-1/8″	12-15/16″	9-1/2″	3″	$5,019.00
4006-12BTF	12	33-1/8″	12-15/16″	9-1/2″	2-3/4″	$5,288.00
4006-16BTF	16	44-1/8″	12-15/16″	9-1/2″	2-3/4″	$6,456.00
4006-20BTF	20	55-1/8″	12-15/16″	9-1/2″	2-3/4″	$7,466.00
* 4006-24BTF	24	71-11/16″	12-15/16″	9-1/2″	3″	$8,371.00
* 4006-30BTF	30	89-9/16″	12-15/16″	9-1/2″	3″	$9,545.00

** Triple Base*
***These towers come with an increased lead time. Please contact Perlick for current lead times.*

OPTIONAL MATCHING DRIP PAN – BRIDGE TEE TOWERS

	No. of Faucets						
Type	8	10	12	16	20	24	30
Top Mount – 5020 Series	5030*	5030*	5030*	5034	5036	5124 (2)	5130 (2)
Top Mount – C18000 Series	C18655*	C18655*	C18655*	C18660	C18665	N/A	N/A
Recessed	58979*	58979*	58979*	69324	69327	N/A	N/A

**Add "TF" to drip pan model number for tarnish-free brass finish.*
***Top Mount C18000 Series drip pan is available with built-in rinser – see page 33.*

EXTRA HIGH BRIDGE TOWERS

To order bridge towers which are higher than standard, add suffix number and additional amount to list price for the head selected. For example, to order a ten-faucet, polished chrome bridge tower that is 15-9/16″ tall, order part number 4006-10BPC2). See chart to the right:

Suffix Number	No. of Faucets	Dispensing Head	Additional Height	Overall Height	Faucet Height	Add to List Price
2	All	Bridge Tower	2-5/8″	15-9/16″	12-1/8″	$231.00
4	All	Bridge Tower	3-3/4″	16-11/16″	13-1/4″	$242.00

DISPENSING TOWERS

GLYCOL-READY

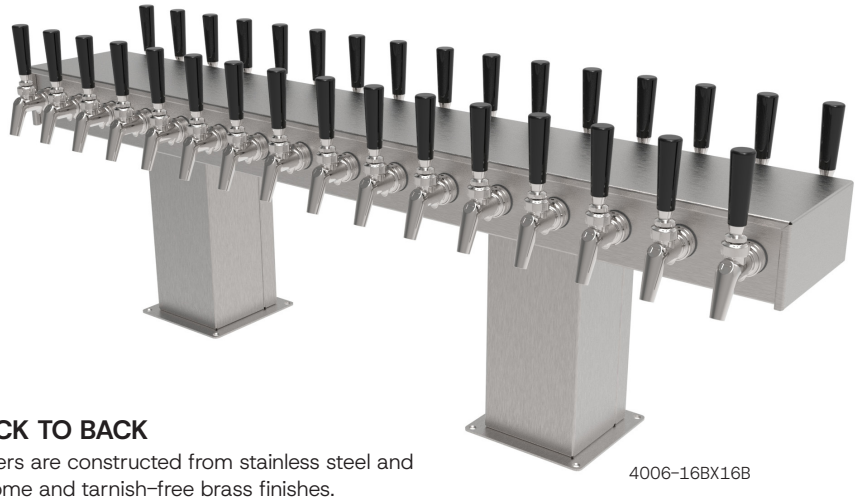

4006-16BX16B

BRIDGE TOWERS – BACK TO BACK

Back to Back Bridge Tee Towers are constructed from stainless steel and also available in polished chrome and tarnish-free brass finishes.

STAINLESS STEEL

Part No.	No. of Faucets	Overall Length	Overall Height	Faucet Height	Faucet Centers	List Price
4006-8BX8B	16	23-15/16″	12-15/16″	9-1/2″	3″	$6,267.00
4006-10BX10B	20	29-15/16″	12-15/16″	9-1/2″	3″	$7,256.00
4006-12BX12B	24	35-7/8″	12-15/16″	9-1/2″	3″	$8,088.00
4006-16BX16B	32	47-13/16″	12-15/16″	9-1/2″	3″	$9,121.00
4006-18BX18B	36	55-3/4″	12-15/16″	9-1/2″	3″	$9,952.00

POLISHED CHROME

Part No.	No. of Faucets	Overall Length	Overall Height	Faucet Height	Faucet Centers	List Price
4006-8BX8BPC	16	23-15/16″	12-15/16″	9-1/2″	3″	$6,739.00
4006-10BX10BPC	20	29-15/16″	12-15/16″	9-1/2″	3″	$7,833.00
4006-12BX12BPC	24	35-7/8″	12-15/16″	9-1/2″	3″	$9,012.00
4006-16BX16BPC	32	47-13/16″	12-15/16″	9-1/2″	3″	$9,908.00
4006-18BX18BPC	36	55-3/4″	12-15/16″	9-1/2″	3″	$10,845.00

TARNISH-FREE BRASS*

Part No.	No. of Faucets	Overall Length	Overall Height	Faucet Height	Faucet Centers	List Price
4006-8BX8BTF	16	23-15/16″	12-15/16″	9-1/2″	3″	$7,296.00
4006-10BX10BTF	20	29-15/16″	12-15/16″	9-1/2″	3″	$8,705.00
4006-12BX12BTF	24	35-7/8″	12-15/16″	9-1/2″	3″	$9,474.00
4006-16BX16BTF	32	47-13/16″	12-15/16″	9-1/2″	3″	$10,948.00
4006-18BX18BTF	36	55-3/4″	12-15/16″	9-1/2″	3″	$11,664.00

**These towers come with an increased lead time. Please contact Perlick for current lead times.*

OPTIONAL MATCHING DRIP PAN – BACK TO BACK BRIDGE TEE TOWERS

	No. of Faucets				
Type	16	20	24	32	36
Top Mount - 5020 Series	5028*	5030*	5030*	5034	5036
Top Mount - C18000 Series	C18655A*	C18655A*	C18658	C18663	C18665
Recessed	N/A	N/A	58979*	69330	69333

** Add "TF" to drip pan model number for tarnish-free brass finish.*
***Top Mount C18000 Series drip pan is available with built-in rinser - see page 33.*

WARNING: California Prop 65 Notice
See page 13 for details.

EXTRA HIGH BACK TO BACK BRIDGE TOWER

To order bridge towers which are higher than standard, add suffix number and additional amount to list price for the head selected. For example, to order a 20 faucet, stainless steel back to back bridge tower that is 15-9/16″ tall to the faucets, order part number 4006-10BX10B2. See chart below:

Suffix Number	No. Of Faucets	Dispensing Head	Additional Height	Overall Height	Faucet Height	Add To List Price
2	All	Back to Back Bridge Tower	2-5/8″	12-1/8″	15-9/16″	$220.00
4	All	Back to Back Bridge Tower	3-3/4″	13-1/4″	16-11/16″	$230.00

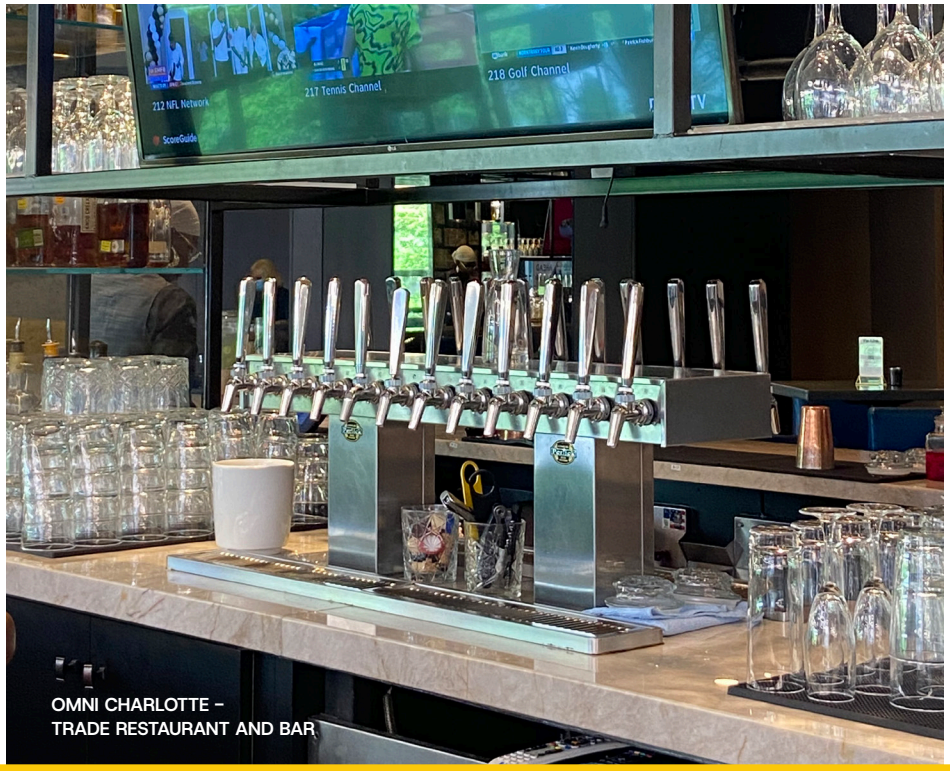

OMNI CHARLOTTE –
TRADE RESTAURANT AND BAR

Perlick's Back to Back Bridge Tee Tower allows for serving a wide variety of draft beverages without having to install multiple towers and also limits the footprint by having faucets on both sides.

DISPENSING TOWERS

GLYCOL-READY

The **Winged Tee Tower** is an aesthetically versatile option made to complement various spaces. The subtle contrast of polished chrome or stainless steel and black end caps provide a sleek and modern, yet sporty look.

66500-6BTF

WINGED TEE TOWERS

Features an all-metal, stainless steel, polished chrome, and tarnish-free brass body.

STAINLESS STEEL

Part No.	No. of Faucets	Faucet Centers	Overall Width	Overall Height	Faucet Height	List Price
66500-4B	4	3″	12-3/4″	16-1/2″	13″	$2,407.00
66500-5B	5	3″	15-3/4″	16-1/2″	13″	$2,628.00
66500-6B	6	3″	18-3/4″	16-1/2″	13″	$2,954.00
66500-S8B	8	3″	24-3/8″	16-1/2″	13″	$3,291.00

66500-6BPC

POLISHED CHROME

Part No.	No. of Faucets	Faucet Centers	Overall Width	Overall Height	Faucet Height	List Price
66500-4BPC	4	3″	12-3/4″	16-1/2″	13″	$2,512.00
66500-5BPC	5	3″	15-3/4″	16-1/2″	13″	$2,786.00
66500-6BPC	6	3″	18-3/4″	16-1/2″	13″	$3,112.00
66500-S8BPC	8	3″	24-3/8″	16-1/2″	13″	$3,554.00

TARNISH-FREE BRASS*

Part No.	No. of Faucets	Faucet Centers	Overall Width	Overall Height	Faucet Height	List Price
66500-4BTF	4	3″	12-3/4″	16-1/2″	13″	$2,796.00
66500-5BTF	5	3″	15-3/4″	16-1/2″	13″	$3,061.00
66500-6BTF	6	3″	18-3/4″	16-1/2″	13″	$3,432.00
66500-S8BTF	8	3″	24-3/8″	16-1/2″	13″	$3,806.00

**These towers come with an increased lead time. Please contact Perlick for current lead times.*

OPTIONAL MATCHING DRIP PAN – WINGED TEE TOWERS

	No. of Faucets			
Style	4	5	6	8
Top Mounted – 5000 Series	5020	5025	5025	5028
Top Mounted – C18000 Series	C18640A	C18645A	C18645A	C18650A
Recessed	C21379A	C21379A	C32357	N/A

66500-12BPC

WINGED BRIDGE TOWERS

Features an all-metal, stainless steel, polished chrome, and tarnish-free brass body.

STAINLESS STEEL

Part No.	No. of Faucets	Faucet Centers	Overall Width	Overall Height	Faucet Height	List Price
66500-8B	8	4-1/8″	32-5/8″	16-1/2″	13″	$4,499.00
66500-10B	10	3″	30-3/4″	16-1/2″	13″	$4,678.00
66500-12B	12	3″	36-3/4″	16-1/2″	13″	$4,910.00

POLISHED CHROME

Part No.	No. of Faucets	Faucet Centers	Overall Width	Overall Height	Faucet Height	List Price
66500-8BPC	8	4-1/8″	32-5/8″	16-1/2″	13″	$4,866.00
66500-10BPC	10	3″	30-3/4″	16-1/2″	13″	$5,046.00
66500-12BPC	12	3″	36-3/4″	16-1/2″	13″	$5,278.00

TARNISH-FREE BRASS*

Part No.	No. of Faucets	Faucet Centers	Overall Width	Overall Height	Faucet Height	List Price
66500-8BTF	8	4-1/8″	32-5/8″	16-1/2″	13″	$5,223.00
66500-10BTF	10	3″	30-3/4″	16-1/2″	13″	$5,439.00
66500-12BTF	12	3″	36-3/4″	16-1/2″	13″	$5,708.00

**These towers come with an increased lead time. Please contact Perlick for current lead times.*

OPTIONAL MATCHING DRIP PAN – WINGED BRIDGE TOWERS

	No. of Faucets		
Style	8	10	12
Top Mounted – 5000 Series	5030	5030	5030
Top Mounted – C18000 Series	C18655	C18655	C18658
Recessed	58979	58979	58979

LIVE AND LOWES STADIUM

WARNING: California Prop 65 Notice
See page 13 for details.

DISPENSING TOWERS

GLYCOL-READY

66500P-6BIM

ILLUMINATED WINGED TEE TOWERS

Plug-and-play illuminated medallions come as shown with white badges.
Brand ID badges are available from beer wholesaler.

STAINLESS STEEL

Part No.	No. of Faucets	Faucet Centers	Overall Width	Overall Height	Faucet Height	List Price
66500P-4BIM	4	3″	12-3/4″	22-1/4″	13″	$3,079.00
66500P-5BIM	5	3″	15-3/4″	22-1/4″	13″	$3,468.00
66500P-6BIM	6	3″	18-3/4″	22-1/4″	13″	$3,962.00
66500P-S8BIM	8	3″	24-3/4″	22-1/4″	13″	$4,635.00

POLISHED CHROME

Part No.	No. of Faucets	Faucet Centers	Overall Width	Overall Height	Faucet Height	List Price
66500P-4BPCIM	4	3″	12-3/4″	22-1/4″	13″	$3,184.00
66500P-5BPCIM	5	3″	15-3/4″	22-1/4″	13″	$3,626.00
66500P-6BPCIM	6	3″	18-3/4″	22-1/4″	13″	$4,120.00
66500P-S8BPCIM	8	3″	24-3/4″	22-1/4″	13″	$4,898.00

TARNISH-FREE BRASS*

Part No.	No. of Faucets	Faucet Centers	Overall Width	Overall Height	Faucet Height	List Price
66500P-4BTFIM	4	3″	12-3/4″	22-1/4″	13″	$3,468.00
66500P-5BTFIM	5	3″	15-3/4″	22-1/4″	13″	$3,901.00
66500P-6BTFIM	6	3″	18-3/4″	22-1/4″	13″	$4,440.00
66500P-S8BTFIM	8	3″	24-3/4″	22-1/4″	13″	$5,150.00

**These towers come with an increased lead time. Please contact Perlick for current lead times.*

OPTIONAL MATCHING DRIP PAN – WINGED TEE TOWERS

	No. of Faucets			
Style	4	5	6	8
Top Mounted - 5000 Series	5020	5025	5025	5028
Top Mounted - C18000 Series	C18640A	C18645A	C18645A	C18650A
Recessed	C21379A	C21379A	C32357	N/A

OPTIONAL TOWER BRAND MEDALLION - 80 MM SIZE

Part No.	Description	List Price
67243-34	Clear badge	$33.29

LEVI'S STADIUM, SANTA CLARA, CA

66500P-12BIM

ILLUMINATED WINGED BRIDGE TOWERS

Plug-and-play illuminated medallions come as shown with white badges. Brand ID badges are available from beer wholesaler.

STAINLESS STEEL

Part No.	No. of Faucets	Faucet Centers	Overall Width	Overall Height	Faucet Height	List Price
66500P-8BIM	8	4-1/8″	32-5/8″	22-1/4″	13″	$5,843.00
66500P-10BIM	10	3″	30-3/4″	22-1/4″	13″	$6,358.00
66500P-12BIM	12	3″	36-3/4″	22-1/4″	13″	$6,926.00

POLISHED CHROME

Part No.	No. of Faucets	Faucet Centers	Overall Width	Overall Height	Faucet Height	List Price
66500P-8BPCIM	8	4-1/8″	32-5/8″	22-1/4″	13″	$6,210.00
66500P-10BPCIM	10	3″	30-3/4″	22-1/4″	13″	$6,726.00
66500P-12BPCIM	12	3″	36-3/4″	22-1/4″	13″	$7,294.00

TARNISH-FREE BRASS*

Part No.	No. of Faucets	Faucet Centers	Overall Width	Overall Height	Faucet Height	List Price
66500P-8BTFIM	8	4-1/8″	32-5/8″	22-1/4″	13″	$6,567.00
66500P-10BTFIM	10	3″	30-3/4″	22-1/4″	13″	$7,119.00
66500P-12BTFIM	12	3″	36-3/4″	22-1/4″	13″	$7,724.00

**These towers come with an increased lead time. Please contact Perlick for current lead times.*

OPTIONAL MATCHING DRIP PAN – WINGED BRIDGE TOWERS

	No. of Faucets		
Style	8	10	12
Top Mounted - 5000 Series	5030	5030	5030
Top Mounted - C18000 Series	C18655	C18655	C18658
Recessed	58979	58979	58979

OPTIONAL TOWER BRAND MEDALLION - 80 MM SIZE

Part No.	Description	List Price
67243-34	Clear badge	$33.29

WARNING: California Prop 65 Notice
See page 13 for details.

DISPENSING TOWERS

GLYCOL-READY

4066-6L

POLISHED CHROME BREW PIPE TOWERS

Features a brewery pipe style in a polished chrome finish.

CHROME – BEER LEADS LEFT

Part No.	No. of Faucets	Overall Width	Overall Height	Faucet Height	Faucet Centers	List Price
4066-6L	6	38-1/8″	17-1/2″	13-7/8″	3″	$6,052.00
4066-8L	8	44-1/8″	17-1/2″	13-7/8″	3″	$6,494.00
4066-10L	10	50-1/16″	17-1/2″	13-7/8″	3″	$7,618.00

CHROME – BEER LEADS RIGHT

Part No.	No. of Faucets	Overall Width	Overall Height	Faucet Height	Faucet Centers	List Price
4066-6R	6	38-1/8″	17-1/2″	13-7/8″	3″	$6,052.00
4066-8R	8	44-1/8″	17-1/2″	13-7/8″	3″	$6,494.00
4066-10R	10	50-1/16″	17-1/2″	13-7/8″	3″	$7,618.00

CHROME – BEER LEADS BOTH WAYS

Part No.	No. of Faucets	Overall Width	Overall Height	Faucet Height	Faucet Centers	List Price
4066-12	12	56-1/16″	17-1/2″	13-7/8″	3″	$7,955.00

MATCHING OPTIONAL DRIP PANS

4066-6L 4066-6R	4066-8L 4066-8R	4066-10L 4066-10R	4066-12
C18750-21	C18750-27	C18750-33	C18750-39

STEEL PLOW BURGER CO.

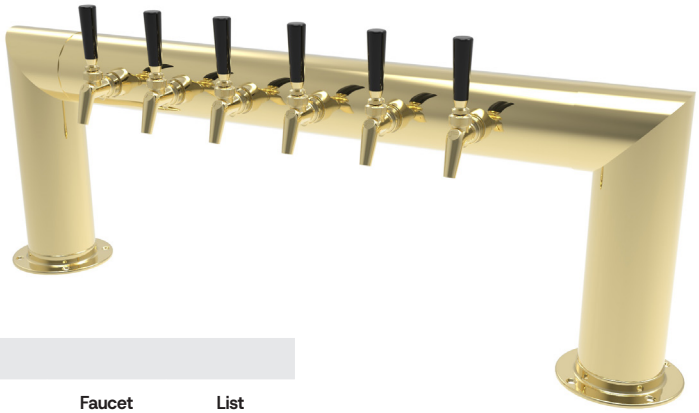

4008-6BTF

PIPE TOWER – PASS THRU

All Pass Thru Pipe Towers are NSF certified.

NSF COMPONENT

POLISHED CHROME

Part No.	No. of Faucets	Faucet Centers	Overall Width	Overall Height	Faucet Height	List Price
4008-6B	6	4″	38″	14″	10-3/8″	$7,123.00
4008-8B	8	3-1/4″	38″	14″	10-3/8″	$7,880.00
4009-10B	10	3-1/4″	46″	14″	10-3/8″	$8,773.00
4009-12B	12	3″	46″	14″	10-3/8″	$9,614.00

TARNISH-FREE BRASS*

Part No.	No. of Faucets	Faucet Centers	Overall Width	Overall Height	Faucet Height	List Price
4008-6BTF	6	4″	38″	14″	10-3/8″	$8,041.00
4008-8BTF	8	3-1/4″	38″	14″	10-3/8″	$8,793.00
4009-10BTF	10	3-1/4″	46″	14″	10-3/8″	$9,671.00
4009-12BTF	12	3″	46″	14″	10-3/8″	$10,496.00

**These towers come with an increased lead time. Please contact Perlick for current lead times.*

OPTIONAL MATCHING DRIP PAN – PASS THRU PIPE TOWER

	No. of Faucets			
Style	6	8	10	12
Top Mounted – 5000 Series	5030	5030	5034	5034
Top Mounted – C18000 Series	C18658	C18658	C18660	C18660
Recessed	58979	58979	69324	69324

KALAMAZOO VALLEY COMMUNITY COLLEGE

WARNING: California Prop 65 Notice
See page 13 for details.

DISPENSING TOWERS

GLYCOL-READY

DRAFT ARMS 3″ O.D.

All 3″ O.D. Draft Arm Towers are NSF certified

POLISHED CHROME

Part No.	No. of Faucets	Overall Height	Faucet Height	List Price
4010	1	12-3/4″	9-1/2″	$1,009.00
4016	2	12-3/4″	9-1/2″	$1,335.00
4026*	3	12-3/4″	9-1/2″	$1,714.00

TARNISH-FREE BRASS**

Part No.	No. of Faucets	Overall Height	Faucet Height	List Price
4010TF	1	12-3/4″	9-1/2″	$1,211.00
4016TF	2	12-3/4″	9-1/2″	$1,529.00
4026TF*	3	12-3/4″	9-1/2″	$1,952.00

**Faucet height of center faucet is 9-1/8″ on draft arms with 3 faucets.*

***These towers come with an increased lead time. Please contact Perlick for current lead times.*

4010

4016TF

EXTRA HIGH DRAFT ARMS – 3″ O.D.

To order 3″ O.D. draft arms one or three inches higher than standard listed above, add suffix number and additional amount to the list price for the head selected. For example, to order a one faucet draft arm that is 13-3/4″ tall, order part number 4010-1. See chart below:

Suffix Number	No. of Faucets	Dispensing Head	Additional Height	Overall Height	Faucet Height	Add to List Price
1	1	3″ O.D. Draft Arm	1″	13-3/4″	10-1/2″	$105.00
3	1	3″ O.D. Draft Arm	3″	15-3/4″	12-1/2″	$116.00
1	2	3″ O.D. Draft Arm	1″	13-3/4″	10-1/2″	$105.00
3	2	3″ O.D. Draft Arm	3″	15-3/4″	12-1/2″	$116.00
2	3	3″ O.D. Draft Arm	2″	15-3/4″	12-1/2″	$105.00

4029

POLISHED CHROME

Part No.	No. of Faucets	Overall Height	Faucet Height	List Price
4028*	3	14″	10-1/2″	$1,582.00
4029	4	14″	10-1/2″	$2,145.00

TARNISH-FREE BRASS**

Part No.	No. of Faucets	Overall Height	Faucet Height	List Price
4028TF*	3	14″	10-1/2″	$1,847.00
4029TF	4	14″	10-1/2″	$2,481.00

**Faucet height of center faucet is 11-1/8″ on draft arms with 3 faucets.*

***These towers come with an increased lead time. Please contact Perlick for current lead times.*

WARNING: California Prop 65 Notice
See page 13 for details.

LIGHT
Coors
ASKAN

DISPENSING TOWERS

GLYCOL-READY

4041-2B

4043-4B

LUCKY TOWERS

POLISHED CHROME

Part No.	No. of Faucets	Overall Height	Faucet Height	List Price
4041-1B	1	16-1/16″	12-15/16″	$1,429.00
4041-2B	2	16-1/16″	12-15/16″	$1,913.00
4041-3B	3	16-1/16″	12-15/16″	$2,344.00

GOLD TONE*

Part No.	No. of Faucets	Overall Height	Faucet Height	List Price
4041GD-1B	1	16-1/16″	12-15/16″	$1,421.00
4041GD-2B	2	16-1/16″	12-15/16″	$1,897.00
4041GD-3B	3	16-1/16″	12-15/16″	$2,320.00

**These towers come with an increased lead time. Please contact Perlick for current lead times.*

PANTHER TOWERS

POLISHED CHROME

Part No.	No. of Faucets	Overall Height	Faucet Height	List Price
4043-3B	3	15-3/4″	13-1/16″	$2,606.00
4043-4B	4	15-3/4″	13-1/16″	$2,827.00

GOLD TONE*

Part No.	No. of Faucets	Overall Height	Faucet Height	List Price
4043GD-3B	3	15-3/4″	13-1/16″	$2,687.00
4043GD-4B	4	15-3/4″	13-1/16″	$2,901.00

**These towers come with an increased lead time. Please contact Perlick for current lead times.*

43839SS

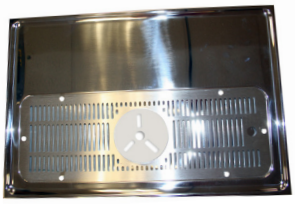

43840SS-R

LUCKY/PANTHER/SEXY DRIP PANS

STAINLESS STEEL

Part No.	Width	Length	List Price
43839SS	16″	16″	$606.00
*43840SS	16″	23-7/8″	$640.00

STAINLESS STEEL WITH GLASS RINSER

43840SS-R	16″	23-3/4″	$968.00

POLISHED GOLD

Part No.	Width	Length	List Price
43839G	16″	16″	$852.00
*43840G	16″	23-7/8″	$1,040.00

NOTE: No holes provided for dispensing towers.

** Not recommended for two 4-faucet Panther Towers*

4085-4B

COBRA TOWERS

POLISHED CHROME				
Part No.	No. of Faucets	Overall Height	Faucet Height	List Price
4085-1B	1	16-1/2″	14-1/8″	$1,324.00
4085-2B	2	16-1/2″	14-1/8″	$1,913.00
4085-3B	3	16-1/2″	14-1/8″	$2,449.00
4085-4B	4	16-1/2″	14-1/8″	$2,985.00

4045-2B

SEXY TOWERS

POLISHED CHROME				
Part No.	No. of Faucets	Overall Height	Faucet Height	List Price
4045-2B	2	16-1/8″	12-13/16″	$1,650.00

GOLD TONE*				
Part No.	No. of Faucets	Overall Height	Faucet Height	List Price
4045GD-2B	2	16-1/8″	12-13/16″	$1,739.00

**These towers come with an increased lead time. Please contact Perlick for current lead times.*

4053PC2B

NAPOLI TOWERS

Decorative dual faucet available with a polished chrome or tarnish-free brass body.

POLISHED CHROME				
Part No.	No. of Faucets	Overall Height	Faucet Height	List Price
4053PC2B	2	19-3/4″	12-3/4″	$2,175.00

GOLD TONE*				
Part No.	No. of Faucets	Overall Height	Faucet Height	List Price
4053GD2B	2	19-3/4″	12-3/4″	$2,264.00

**These towers come with an increased lead time. Please contact Perlick for current lead times.*

WARNING: California Prop 65 Notice
See page 13 for details.

DISPENSING TOWERS

GLYCOL-READY

GAMBRINUS TOWERS

SATIN CHROME

Part No.	No. of Faucets	Overall Height	Faucet Height	List Price
4005-3B	3	19-3/8″	9-7/16″	$8,287.00
4005-4B	4	19-3/8″	9-7/16″	$8,707.00
4005-5B	5	19-3/8″	9-7/16″	$9,128.00
4005-6B	6	19-3/8″	9-7/16″	$9,538.00
4005D3B	3/3*	19-3/8″	9-7/16″	$9,454.00
4005D4B	4/4*	19-3/8″	9-7/16″	$10,232.00

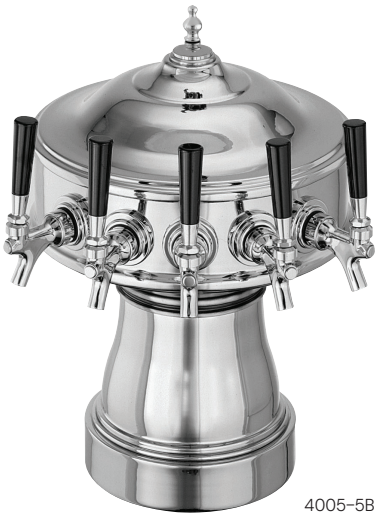

4005-5B

POLISHED CHROME

Part No.	No. of Faucets	Overall Height	Faucet Height	List Price
4005-3BPC	3	19-3/8″	9-7/16″	$7,552.00
4005-4BPC	4	19-3/8″	9-7/16″	$7,888.00
4005-5BPC	5	19-3/8″	9-7/16″	$8,235.00
4005-6BPC	6	19-3/8″	9-7/16″	$8,561.00
4005D3BPC	3/3*	19-3/8″	9-7/16″	$8,467.00
4005D4BPC	4/4*	19-3/8″	9-7/16″	$9,098.00

TARNISH-FREE BRASS**

Part No.	No. of Faucets	Overall Height	Faucet Height	List Price
4005-3BTF	3	19-3/8″	9-7/16″	$8,263.00
4005-4BTF	4	19-3/8″	9-7/16″	$8,676.00
4005-5BTF	5	19-3/8″	9-7/16″	$9,088.00
4005-6BTF	6	19-3/8″	9-7/16″	$9,490.00
4005D3BTF	3/3*	19-3/8″	9-7/16″	$9,406.00
4005D4BTF	4/4*	19-3/8″	9-7/16″	$10,169.00

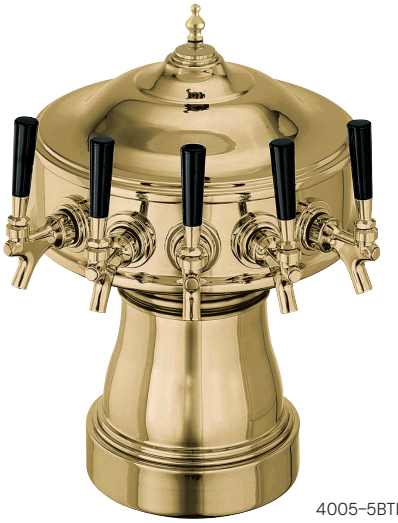

4005-5BTF

**Back to back configuration*
***These towers come with an increased lead time. Please contact Perlick for current lead times.*

TORINO TOWERS
With Tarnish-Free Polished Brass Faucet Collar*

Full ceramic body with gold detailing. Gold metal collar supports two or three faucets.

Part No.	No. of Faucets	Ceramic Color	Overall Height	Faucet Height	List Price
4054WH2B	2	White	26-7/8″	16-5/8″	$3,944.00
4054WH3B	3	White	26-7/8″	16-5/8″	$4,315.00
4054BL2B	2	Blue	26-7/8″	16-5/8″	$3,944.00
4054BL3B	3	Blue	26-7/8″	16-5/8″	$4,315.00
4054GR2B	2	Green	26-7/8″	16-5/8″	$3,944.00
4054GR3B	3	Green	26-7/8″	16-5/8″	$4,315.00

WHITE BLUE GREEN

**These towers come with an increased lead time. Please contact Perlick for current lead times.*

ROMA TOWER

Features an all-metal polished chrome or gold-tone body with black, white, blue, or green ceramic skirt.

POLISHED CHROME

Part No.	No. Of Faucets	Ceramic Color	Overall Height	Faucet Height	List Price
4056BK3BPC	3	Black	20-1/2″	13″	$3,184.00
4056BK4BPC	4	Black	20-1/2″	13″	$3,405.00
4056BK5BPC	5	Black	20-1/2″	13″	$3,626.00
4056WH3BPC	3	White	20-1/2″	13″	$3,184.00
4056WH4BPC	4	White	20-1/2″	13″	$3,405.00
4056WH5BPC	5	White	20-1/2″	13″	$3,626.00
4056BL3BPC	3	Blue	20-1/2″	13″	$3,184.00
4056BL4BPC	4	Blue	20-1/2″	13″	$3,405.00
4056BL5BPC	5	Blue	20-1/2″	13″	$3,626.00
4056GR3BPC	3	Green	20-1/2″	13″	$3,184.00
4056GR4BPC	4	Green	20-1/2″	13″	$3,405.00
4056GR5BPC	5	Green	20-1/2″	13″	$3,626.00

GOLD TONE*

Part No.	No. Of Faucets	Ceramic Color	Overall Height	Faucet Height	List Price
4056BK3B	3	Black	20-1/2″	13″	$3,160.00
4056BK4B	4	Black	20-1/2″	13″	$3,373.00
4056BK5B	5	Black	20-1/2″	13″	$3,586.00
4056WH3B	3	White	20-1/2″	13″	$3,160.00
4056WH4B	4	White	20-1/2″	13″	$3,373.00
4056WH5B	5	White	20-1/2″	13″	$3,586.00
4056BL3B	3	Blue	20-1/2″	13″	$3,160.00
4056BL4B	4	Blue	20-1/2″	13″	$3,373.00
4056BL5B	5	Blue	20-1/2″	13″	$3,586.00
4056GR3B	3	Green	20-1/2″	13″	$3,160.00
4056GR4B	4	Green	20-1/2″	13″	$3,373.00
4056GR5B	5	Green	20-1/2″	13″	$3,586.00

**These towers come with an increased lead time. Please contact Perlick for current lead times.*

BLACK WHITE BLUE GREEN

4056WH4BPC

4056BK4B

DISPENSING TOWERS

GLYCOL-READY

4070 AND 4075 SERIES WALL MOUNT DISPENSING HEADS

These dispensing heads feature an easily removed back panel which is mounted to the wall and a built-in drainer with stainless steel glass rack.
Beer line leads exit through the back of the head. Choice of drain tubing out of the back of the head or out of the bottom drains in front of the wall. Two faucet holes are plugged on the 2 and 6 faucet heads.

Part No.	No. of Faucets	Faucet Centers	Overall Width	Overall Height	Faucet Height	List Price
4070A2B	2	8-1/4"	12-5/16"	17-3/4"	10-3/8"	$1,913.00
4070A4B	4	2-3/4"	12-5/16"	17-3/4"	10-3/8"	$2,092.00
4075A6B	6	2-3/4"	23"	17-3/4"	10-3/8"	$2,377.00
4075A8B	8	2-3/4"	23"	17-3/4"	10-3/8"	$2,766.00

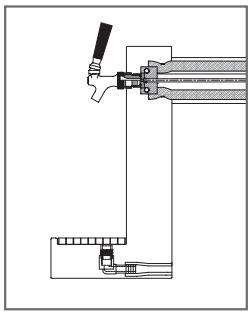

4075A4B

SPACESAVER UNDERBAR HEADS

Available with lines extending out of the back or bottom of heads.

13" SPACESAVER

Part No.	No. of Faucets	Faucet Centers	Overall Width	List Price
4040A2B	2	8-1/4"	13"	$1,598.00
4040A3B	3	4-1/8"	13"	$1,661.00
4040A4B	4	2-3/4"	13"	$1,725.00

4040A4B

21" SPACESAVER

Part No.	No. of Faucets	Faucet Centers	Overall Width	List Price
4060A2B	2	16-1/2"	21"	$1,808.00
4060A3B	3	8-1/4"	21"	$1,871.00
4060A4B	4	5-1/2"	21"	$1,987.00
4060A5B	5	4-1/8"	21"	$2,103.00
4060A6B	6	2-3/4"	21"	$2,219.00
4060A7B	7	2-3/4"	21"	$2,335.00

NOTE: To order with lead out of the bottom for no additional charge, use suffix BTM. For example, 4040A4B-BTM.

UNDERBAR DRIP PANS (FOR SPACESAVER HEADS)

Part No.	Description	List Price
3713	13" Underbar drainer	$1,331.00
3713-1	13" Drainer only	$904.00
3721	21" Underbar drainer	$1,319.00
3721-1	21" Drainer only	$894.00

3713-1

3713

SPACESAVER UNDERBAR HEADS

Part No.	Description	List Price
7055A8	18" Wide x 18-9/16" Deep - for 4040 Series	$1,940.00
7055D8	18" Wide x 24" Deep - for 4040 Series	$2,130.00
7055A9	24" Wide x 18-9/16" Deep - for 4060 Series	$2,110.00
7055D9	24" Wide x 24" Deep - for 4060 Series	$2,380.00

ACCESSORY FOR SPACESAVER UNDERBAR HEADS

63262	Accessory Leg Kit for Beer Drainer	$127.00

7055D9

MODULAR WALL MOUNT DISPENSER – GLYCOL COOLED

Features a seamless head in any length up to 96″ (32 faucets). Faucets located on 3″ centers. Beer and glycol leads may exit through the back or bottom. Accessory glass rinser can be added to each glass rack. Easy Installation system. Heavy duty 14 gauge mounting bracket with slotted hole mounts allows anchoring to multiple wall studs along the length of the dispensing head. Black faucet handles not included.

LEADS OUT BACK

Part No.	Overall Width	No. of Faucets	No. of Glass Racks	List Price
4076BK2	9″	2	1	$2,333.00
4076BK3	9″	3	1	$2,659.00
4076BK4	12″	4	1	$2,932.00
4076BK5	15″	5	1	$3,206.00
4076BK6	18″	6	1	$3,532.00
4076BK7	21″	7	1	$3,753.00
4076BK8	24″	8	1	$3,974.00
4076BK9	27″	9	2	$4,405.00
4076BK10	30″	10	2	$4,836.00
4076BK11	33″	11	2	$5,188.00
4076BK12	36″	12	2	$5,540.00
4076BK13	39″	13	2	$5,761.00
4076BK14	42″	14	2	$6,035.00
4076BK15	45″	15	2	$6,308.00
4076BK16	48″	16	2	$6,582.00
4076BK17	51″	17	3	$6,908.00
4076BK18	54″	18	3	$7,234.00
4076BK19	57″	19	3	$7,612.00
4076BK20	60″	20	3	$7,991.00
4076BK21	63″	21	3	$8,370.00
4076BK22	66″	22	3	$8,801.00
4076BK23	69″	23	3	$9,232.00
4076BK24	72″	24	4	$9,715.00
4076BK25	75″	25	4	$9,936.00
4076BK26	78″	26	4	$10,157.00
4076BK27	81″	27	4	$10,378.00
4076BK28	84″	28	4	$10,599.00
4076BK29	87″	29	4	$10,820.00
4076BK30	90″	30	4	$11,041.00
4076BK31	93″	31	4	$11,367.00
4076BK32	96″	32	4	$11,693.00

LEADS OUT BOTTOM

Part No.	Overall Width	No. of Faucets	No. of Glass Racks	List Price
4076DN2	9″	2	1	$2,333.00
4076DN3	9″	3	1	$2,659.00
4076DN4	12″	4	1	$2,932.00
4076DN5	15″	5	1	$3,206.00
4076DN6	18″	6	1	$3,532.00
4076DN7	21″	7	1	$3,753.00
4076DN8	24″	8	1	$3,974.00
4076DN9	27″	9	2	$4,405.00
4076DN10	30″	10	2	$4,836.00
4076DN11	33″	11	2	$5,188.00
4076DN12	36″	12	2	$5,540.00
4076DN13	39″	13	2	$5,761.00
4076DN14	42″	14	2	$6,035.00
4076DN15	45″	15	2	$6,308.00
4076DN16	48″	16	2	$6,582.00
4076DN17	51″	17	3	$6,908.00
4076DN18	54″	18	3	$7,234.00
4076DN19	57″	19	3	$7,612.00
4076DN20	60″	20	3	$7,991.00
4076DN21	63″	21	3	$8,370.00
4076DN22	66″	22	3	$8,801.00
4076DN23	69″	23	3	$9,232.00
4076DN24	72″	24	4	$9,715.00
4076DN25	75″	25	4	$9,936.00
4076DN26	78″	26	4	$10,157.00
4076DN27	81″	27	4	$10,378.00
4076DN28	84″	28	4	$10,599.00
4076DN29	87″	29	4	$10,820.00
4076DN30	90″	30	4	$11,041.00
4076DN31	93″	31	4	$11,367.00
4076DN32	96″	32	4	$11,693.00

ACCESSORY – GLASS RINSER

Part No.	List Price
4076GR	$244.00/Each

WARNING: California Prop 65 Notice
See page 13 for details.

MODULAR WALL MOUNT DISPENSER

(Information Continued)

ACCESSORY – GLASS RINSER

Using the guide below, determine the number of glass racks. A "glass rinser" can be optionally located in the middle of each glass rack. Use a "M" to include a glass rinser or a "X" to designate NO glass rinser.

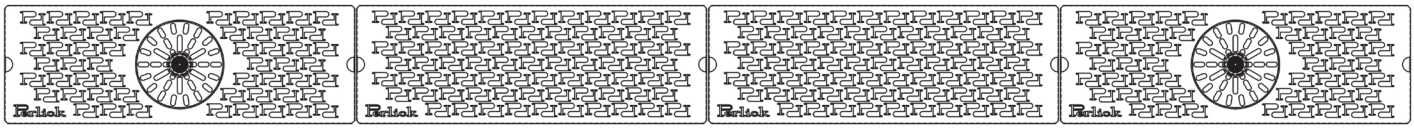

Example Glass Rinser Locations: MXXM

38 = Fittings for 3/8" Beer Line
31 = Fittings for 5/16" Beer Line
25 = Fittings for 1/4" Beer Line

Model Number Key: 4076 – BK or DN (direction of leads) – # of Faucets – M or X (Glass Rinser Options)

EXAMPLES	DESCRIPTION
4076BK30MXXM38	Wall mount head, leads out the back, 30 faucets, glass rinser in rack 1, no rinser in racks 2 & 3, rinser in rack 4, 3/8" fittings
4076DN21XMX31	Wall mount head, leads out the bottom, 21 faucets, no glass rinser in rack 1, rinser in rack 2, no rinser in rack 3, 5/16" fittings
4076BK6×25	Wall mount head, leads out the back, 6 faucets, no glass rinser, 1/4" fittings

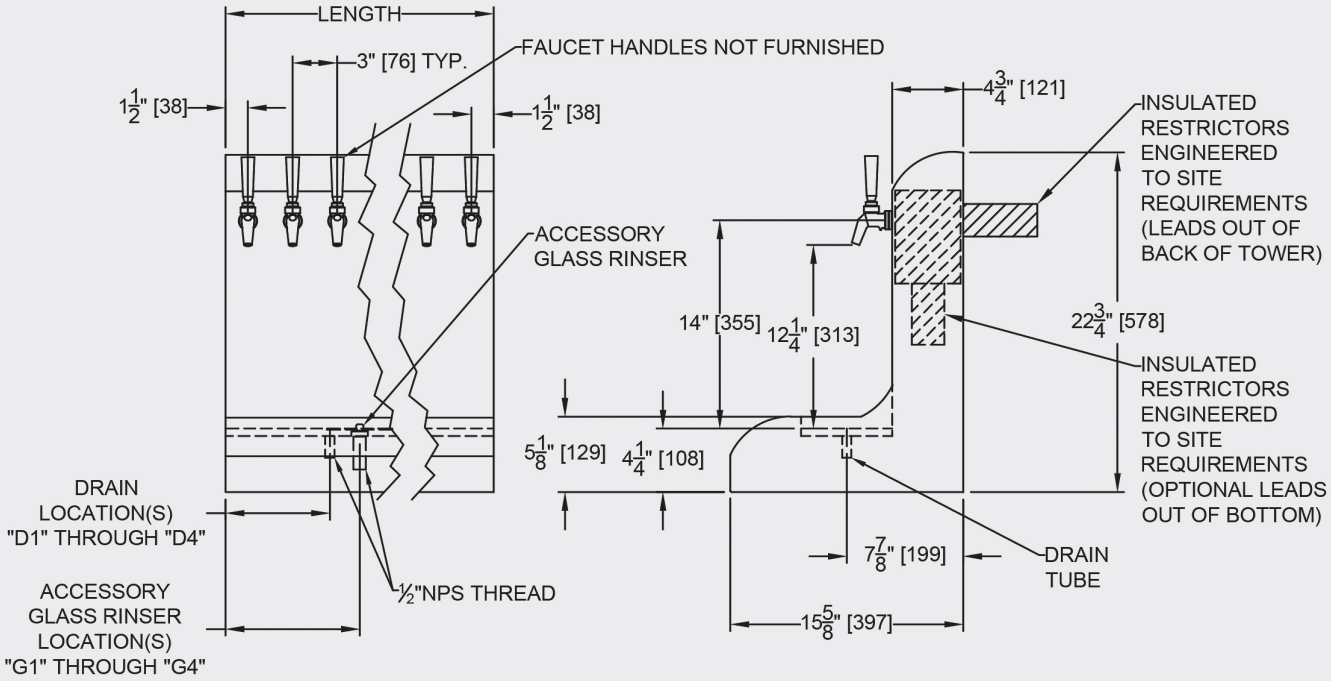

TOP MOUNTED DRIP PANS WITH GLASS RINSER ON CENTER 6000 Series

STAINLESS STEEL

Part No.	Depth	Width	List Price
6020-GRC	7-3/4″	15″	$898.00
6025-GRC	7-3/4″	20-3/4″	$930.00
6030-GRC	7-3/4″	24″	$998.00
6035-GRC	7-3/4″	28	$1,029.00
6040-GRC	7-3/4″	37″	$1,082.00
6045-GRC	7-3/4″	42″	$1,103.00
6050-GRC	7-3/4″	48″	$1,155.00

6030-GRC
Top View

6030-GRC

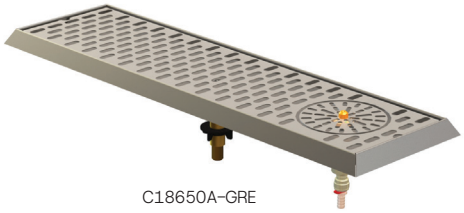

C18650A-GRE

TOP MOUNTED DRIP PANS WITH GLASS RINSER ON END C18000 Series

STAINLESS STEEL

Part No.	Depth	Width	List Price
C18640A-GRE	7-3/4″	14-3/16″	$691.00
C18645A-GRE	7-3/4″	20-3/4″	$730.00
C18650A-GRE	7-3/4″	26-3/4″	$832.00
C18657-GRE	7-3/4″	36″	$870.00
C18663-GRE	7-3/4″	52-7/16″	$1,126.00

C18750-21-GRC-

TOP MOUNTED DRIP PANS WITH GLASS RINSER OFFSET ON CENTER C18000 Series For Brewpipe Towers

STAINLESS STEEL

Part No.	Depth	Width	List Price
C18750-21-GRC	15-1/2″	21″	$935.00
C18750-27-GRC	15-1/2″	27″	$1,175.00
C18750-33-GRC	15-1/2″	33″	$2,102.00
C18750-39-GRC	15-1/2″	39″	$2,136.00
C18750-51-GRC	15-1/2″	51″	$2,469.00
C18750-63-GRC	15-1/2″	63″	$2,716.00

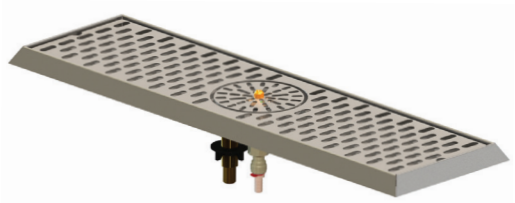

C18650A-GRC

TOP MOUNTED DRIP PANS WITH GLASS RINSER ON CENTER C18000 Series

STAINLESS STEEL

Part No.	Depth	Width	List Price
C18640A-GRC	7-3/4″	14-3/16″	$691.00
C18645A-GRC	7-3/4″	20-3/4″	$730.00
C18650A-GRC	7-3/4″	26-3/4″	$832.00
C18655-GRC	7-3/4″	33″	$843.00
C18658-GRC	7-3/4″	39″	$917.00
C18660-GRC	7-3/4″	46-9/16″	$1,004.00
C18665-GRC	7-3/4″	59-3/4″	$1,166.00
C18670-GRC	7-3/4″	66″	$1,264.00
C18675-GRC	7-3/4″	72″	$1,317.00

TOP MOUNTED BEVEL EDGE DRIP PANS For Tee Shaped Brew Pipe Towers

STAINLESS STEEL

Part No.	Depth	Width	List Price
7020-32	15-1/2″	21″	$1,491.00
7020-38	15-1/2″	27″	$1,753.00
7020-44	15-1/2″	33″	$2,016.00
7020-50	15-1/2″	39″	$2,277.00
7020-62	15-1/2″	51″	$2,802.00

WARNING: California Prop 65 Notice
See page 13 for details.

DRIP PANS

C18645A

C18645A bottom view

TOP MOUNTED DRIP PANS – C18000 SERIES

STAINLESS STEEL			
Part No.	Depth	Width	List Price
C18635A	7-3/4″	8-3/4″	$299.00
C18640A	7-3/4″	14-3/16″	$346.00
C18645A	7-3/4″	20-3/4″	$374.00
C18650A	7-3/4″	26-3/4″	$431.00
C18655	7-3/4″	33″	$487.00
C18658	7-3/4″	39″	$567.00
C18660	7-3/4″	46-9/16″	$649.00
C18663	7-3/4″	52-7/16″	$701.00
C18665	7-3/4″	59-3/4″	$780.00

TARNISH-FREE BRASS			
Part No.	Depth	Width	List Price
C18635ATF	7-3/4″	8-3/4″	$671.00
C18640ATF	7-3/4″	14-3/16″	$706.00
C18645ATF	7-3/4″	20-3/4″	$743.00
C18650ATF	7-3/4″	26-3/4″	$1,082.00
C18655TF	7-3/4″	33″	$1,122.00

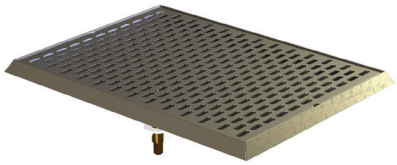

C18750-21

TOP MOUNTED DRIP PANS – C18000 SERIES FOR BREW PIPE TOWERS

STAINLESS STEEL							
Part No.	Depth	Width	List Price	Part No.	Depth	Width	List Price
C18750-21	15-1/2″	21″	$727.00	C18750-39	15-1/2″	39″	$985.00
C18750-27	15-1/2″	27″	$761.00	C18750-51	15-1/2″	51″	$1,089.00
C18750-33	15-1/2″	33″	$812.00	C18750-63	15-1/2″	63″	$1,260.00

TOP MOUNTED DRIP PANS – 5000 SERIES

STAINLESS STEEL			
Part No.	Depth	Width	List Price
5015	5-3/8″	5-3/8″	$324.00
5020	4-7/8″	13-3/4″	$328.00
5025	4-7/8″	19″	$341.00
5028	4-7/8″	24″	$360.00
5030	4-7/8″	37″	$481.00
5034	4-7/8″	47-1/16″	$747.00
5036	4-7/8″	59-7/8″	$840.00
5124	7-7/16″	40-1/16″	$615.00
5130	7-7/16″	48-5/8″	$735.00

TARNISH-FREE BRASS			
Part No.	Depth	Width	List Price
5015TF	4-7/8″	5-3/8″	$617.00
5020TF	4-7/8″	13-3/4″	$701.00
5025TF	4-7/8″	19″	$784.00
5028TF	4-7/8″	24″	$869.00
5030TF	4-7/8″	37″	$1,050.00

5020

5020TF

RECESSED DRIP PANS

STAINLESS STEEL			
Part No.	Depth	Width	List Price
C11988A	7-5/8″	8-5/16″	$305.00
C21379A	7-5/8″	14-1/16″	$345.00
C32357	5-1/8″	19-1/4″	$391.00
C32257	7-5/8″	20-5/8″	$394.00
58979	5-1/8″	37-5/16″	$483.00
69324	7-3/4″	46-1/2″	$788.00
69327	7-3/4″	59-5/8″	$1,103.00
69330	5-3/16″	47-5/16″	$998.00
69333	5-3/16″	60-1/8″	$1,208.00

TARNISH-FREE BRASS			
Part No.	Depth	Width	List Price
C11988ATF	7-5/8″	8-5/16″	$705.00
C21379ATF	7-5/8″	14-1/16″	$791.00
C32357TF	5-1/8″	19-1/4″	$806.00
C32257TF	7-5/8″	20-5/8″	$952.00
58979TF	5-1/8″	37-5/16″	$1,210.00

C21379A

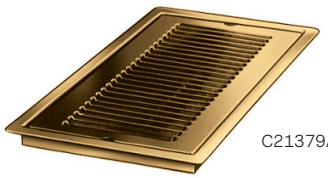

C21379ATF

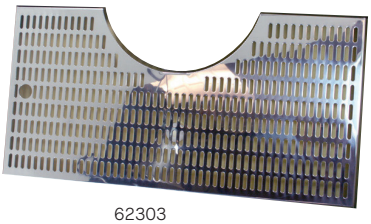

62303

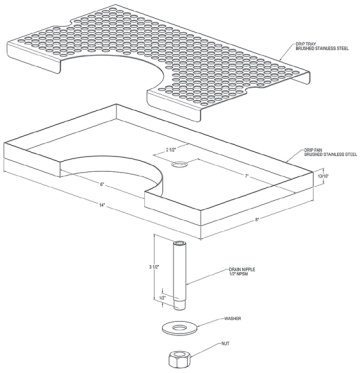

57120

CUTOUT DRIP PANS

Part No.	Description	Diameter	Depth	Width	List Price
62303SS	Stainless drip pan and glass rack with cutout for Roma towers	8.27" (210 mm)	9.84" (25 cm)	19.68" (50 cm)	$678.00
62304	Brass drip pan with stainless glass rack for torino towers	9.84" (250 mm)	19.68" (50 cm)	9.84" (25 cm)	$874.00
66596	For 4″ draft arm	6″	8″	14″	$628.00
66596TF	For 4″ draft arm (Tarnish-free brass)	6″	8″	14″	$869.00

ANGLED DRIP PANS

STAINLESS STEEL			
Part No.	**Depth**	**Width**	**List Price**
57120	6-1/2″	19-1/4″	$666.00

TARNISH-FREE BRASS			
Part No.	**Depth**	**Width**	**List Price**
57120TF	6-1/2″	19-1/4″	$1,428.00

43839SS

43840SS-R

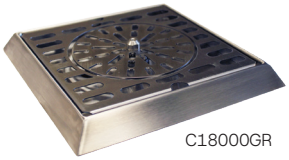

C18000GR

68743SS

5000GR

67971GR

LUCKY/PANTHER/SEXY DRIP PANS

STAINLESS STEEL			
Part No.	**Depth**	**Width**	**List Price**
43839SS	16″	16″	$606.00
*43840SS	16″	23-7/8″	$640.00

STAINLESS STEEL WITH GLASS RINSER			
43840SS-R	16″	23-3/4″	$968.00

GOLD TONE			
Part No.	**Depth**	**Width**	**List Price**
43839G	16″	16″	$852.00
*43840G	16″	23-7/8″	$1,040.00

NOTE: No holes provided for dispensing towers.
** Not recommended for two 4-faucet Panther Towers*

GLASS RINSER WITH DRAINER

Part No.	Description	Depth	Width	List Price
C18000GR	Top mount bevel edge drainer	7-5/8"	7-5/8"	$685.00
5000GR	Top mount straight edge drainer	7-5/8"	7-5/8"	$666.00
67971GR	Recessed drainer	7-5/8"	7-5/8"	$642.00

Part No.	Description	List Price
68743SS	Rinser with John Guest fitting kit	$289.00
GR-IK	Water pressure regulator parts bag for rinser	$114.00

DRIP PAN ACCESSORIES

Part No.	Description	List Price (Per Foot)
1390D	1/2″ ID vinyl drain tube – anti-microbial	$2.85/Ft.

WARNING: California Prop 65 Notice
See page 13 for details.

PERLICK CENTURY TRUNK LINES

The only in the market utilizing copper coolant lines

- All product lines have a barrier to hold in CO2 and keep out oxygen
- All lines are taped to poly glycol lines, vapor sealed, and insulated with 3/4" wall insulation
- The exterior of the trunk housing bundle is wrapped with black PVC tape to protect the insulation and for ease of installation

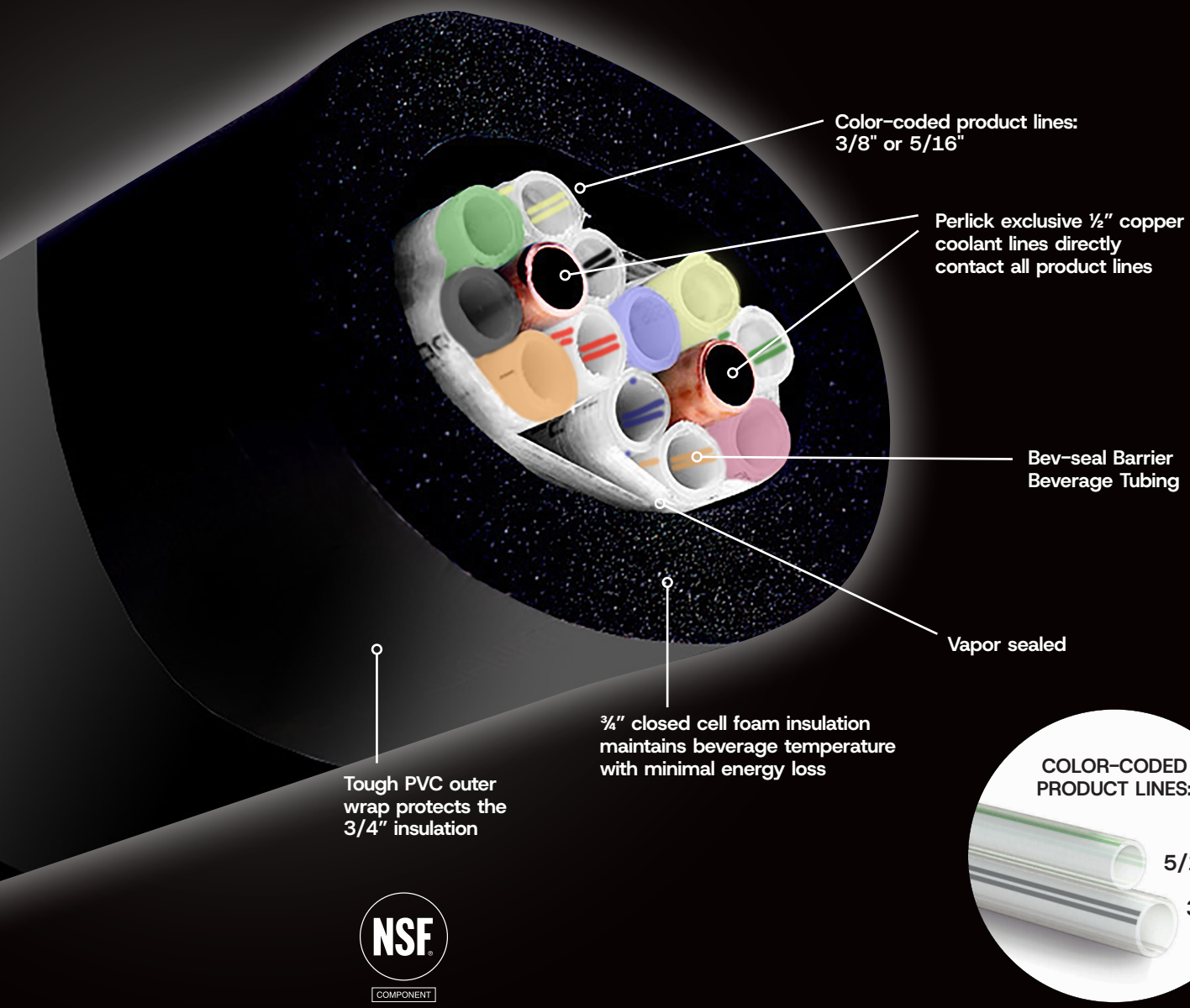

NSF COMPONENT

BASIC TRUNK HOUSING – 2-24 LINES

Trunk Housings are custom fabricated at the factory for each installation. Beer lines are taped to copper coolant lines, vapor sealed, and encased in an insulated housing. The exterior of the trunk housing bundle is wrapped with black PVC tape to protect the insulation and for ease of installation. Order housings with one beer line for each dispensing faucet specified. The exterior of the trunk housing is also available without black PVC tape for Plenum applications.

NSF COMPONENT

3/8" TRUNK HOUSINGS – 3/8" BEVERAGE BARRIER TUBING W/ TWO 1/2" COPPER COOLANT LINES

Accuflex Part No.	No. of Beer Lines	No. of Coolant Lines	Overall Diameter	List Price (Per Ft.)
4220-2	2	2	3"	$44.00
4220-4	4	2	3"	$48.30
4220-5	5	2	3-1/2"	$49.67
4220-6	6	2	3-1/2"	$51.03
4220-8	8	2	3-1/2"	$59.43
4220-10	10	2	3-3/4"	$69.41
4220-12	12	2	4-1/4"	$81.00
4220-16	16	4	4-3/4"	$99.02
4220-20	20	4	5"	$112.35

5/16" TRUNK HOUSINGS – 5/16" BEVERAGE BARRIER TUBING W/ TWO 1/2" COPPER COOLANT LINES

Accuflex Part No.	No. of Beer Lines	No. of Coolant Lines	Overall Diameter	List Price (Per Ft.)
4303-2	2	2	3"	$44.00
4303-4	4	2	3"	$48.30
4303-5	5	2	3-1/2"	$49.67
4303-6	6	2	3-1/2"	$51.03
4303-8	8	2	3-1/2"	$59.43
4303-10	10	2	3-3/4"	$69.41
4303-12	12	2	4-1/4"	$81.00
4303-16	16	4	4-3/4"	$99.02
4303-20	20	4	5"	$112.35

TECHNICAL SPECIFICATIONS

Diameter	Restriction Per Foot	Beer volume per 50' (oz.)
3/8"	0.064	37.7
5/16"	0.144	26.73

MAX TRUNK LINE LENGTH GUIDELINES:

UNDER FLOOR SYSTEMS
Walk-in cooler on same floor as dispensing head

NEGATIVE LIFT SYSTEMS
Dispensing head 8 ft below walk-in cooler

TUBE	MAX LENGTH with Straight CO2 (17 PSI or Less)	MAX LENGTH with Mixed Gas (35 PSI Max)	MAX LENGTH with Pumps (75 PSI Max)
3/8" ID	170 Ft / 250 Ft	450 Ft / 530 Ft	1070 Ft / 1150 Ft
5/16" ID	55 Ft / 90 Ft	170 Ft / 200 Ft	425 Ft / 460 Ft

Contact Perlick directly for engineering assistance with any insulated beer line run configuration with a Lift System, Up, Over & Down System, or Negative Lift System (other than stated above).

ADDITIONAL BEVERAGE LINES

Lines for beverages other than beer can be added to a basic trunk housing. These lines run inside the insulated housing, but are not in contact with the copper coolant lines.

ADDITIONAL BEVERAGE LINES – COST PER FOOT

No. of Beer Lines	No. of Additional Beverage Lines					
	P1	P2	P3	P4	P5	P6
2	$46.00	$50.00	$52.70	$56.60	$59.50	$63.40
4	$51.30	$55.50	$57.90	$60.70	$64.70	$67.40
5	$52.70	$56.60	$59.50	$63.40	$66.10	$68.80
6	$55.50	$57.90	$60.70	$64.70	$67.40	$70.10
8	$64.70	$67.40	$70.10	$72.90	$75.40	$78.10
10	$71.40	$74.20	$76.90	$79.60	$82.10	$84.80
12	$82.10	$84.80	$87.60	$91.60	$94.30	$98.10

Note: The additional lines must be of the same diameter as the basic trunk housing beer lines.

PART NUMBER EXAMPLES:
To add (4) 3/8" lines to a 6 Line Trunk Housing:
Part Number = 4220-6P4

To add (4) 5/16" lines to a 6 Line Trunk Housing:
Part Number = 4303-6P4

Perlick Century Trunk Lines deliver beverages to the glass, and the customer, at the intended temperature and quality.
QUALITY PRODUCT = REPEAT SALES = PROFIT

WARNING: California Prop 65 Notice
See page 13 for details.

TRUNK HOUSING / ACCESSORIES

TRUNK HOUSING BRANCH CONNECTION

Includes 3 feet of trunk housing. One required for each additional refrigerated dispensing station.

Note: Only available with copper trunk housing.

Part No.	Description	List Price
C23045	Trunk housing branch (within 5 ft. of dispensing head end)	$198.00
C23046	Trunk housing branch (more than 5 ft. from dispensing head end)	$489.00

SPLICE KIT

For use with all Perlick trunk housing.

Part No.	Description	List Price
63181-4	3/8" Splice kit - 4 line housing	$185.00
63181-6	3/8" Splice kit - 6 line housing	$190.00
63181-8	3/8" Splice kit - 8 line housing	$200.00
63181-10	3/8" Splice kit - 10 line housing	$225.00
63181-12	3/8" Splice kit - 12 line housing	$250.00
63181-4-312	5/16" Splice kit, 4 product, 5/16" tubing	$185.00
63181-6-312	5/16" Splice kit, 6 product, 5/16" tubing	$190.00
63181-8-312	5/16" Splice kit, 8 product, 5/16" tubing	$200.00
63181-10-312	5/16" Splice kit, 10 product, 5/16" tubing	$225.00
63181-12-312	5/16" Splice kit, 12 product, 5/16" tubing	$250.00

TRUNK HOUSING TAPE

For use with all Perlick trunk housing.

Part No.	Description	List Price
C15393	6 yd. roll - 1/2" filament tape	$8.90
C15312	60 yd. roll - 1/2" filament tape	$31.55
C15394	6 yd. roll - 2" clear polytape	$17.65
C15311	36 yd. roll - clear polytape	$60.70
C15699	6 yd. roll - 2" black polytape	$17.45
C15698	36 yd. roll - 2" black polytape	$67.90

TRUNK HOUSING ACCESSORIES

For use with all Perlick trunk housing.

Part No.	Description	List Price
C31573	Poly housing hanger strap kit	$103.00
61082-1	Aluminum housing hanger	$7.80
C3PS	3" Pipe strap	$5.70
C4PS	4" Pipe strap	$5.70
C15392	Adhesive - 1/2 pint can	$30.30
C15455-1	Donut sealing gasket	$8.15
C14230B1	Braided tubing 3/8" - 100 ft. roll	$160.00

TRUNK HOUSING WITH HEAT RESISTANT JACKETING

NSF COMPONENT

NOTE: Maximum length that can be ordered is 125 ft.

3/8" JACKETED TRUNK HOUSINGS

3/8" Beverage barrier tubing with two 1/2" copper coolant lines; NSF certified component

Part No.	No. Of Beer Lines	Overall Diameter	List Price (Per Ft.)
4220J2	2	3"	$67.40
4220J4	4	3"	$72.90
4220J5	5	3-1/2"	$74.20
4220J6	6	3-1/2"	$76.90
4220J8	8	3-1/2"	$83.60
4220J10	10	3-3/4"	$91.60
4220J12	12	4-1/4"	$105.00

5/16" JACKETED TRUNK HOUSINGS

5/16" Beverage Barrier tubing w/ two 1/2" copper coolant lines; NSF certified component

Part No.	No. Of Beer Lines	Overall Diameter	List Price (Per Ft.)
4303J2	2	3"	$67.40
4303J4	4	3"	$72.90
4303J5	5	3-1/2"	$74.20
4303J6	6	3-1/2"	$76.90
4303J8	8	3-1/2"	$83.60
4303J10	10	3-3/4"	$91.60
4303J12	12	4-1/4"	$105.00

ENSURE THE PERFECT POUR

PERLICK CENTURY SYSTEMS NOW PROTECTED BY DRAUGHT GUARD'S DRAUGHT LINE TREATMENT TECHNOLOGY

Draught Guard's proprietary and third-party validated technology propagates an omnipresent, low-frequency treatment signal throughout the entire draught beer line, no matter the length of line. This oscillating treatment signal works around the clock to manage bacteria levels, inhibit the growth of biofilm, and prevent the formation beer stone.

Each Perlick Century System is factory engineered to MAXIMIZE PROFITS for the bar owner, brewery, restaurant chain or large venue by delivering:

- A beverage to the customer that best represents the producer's intended quality and style, ***driving repeat sales***
- Consistent pours at the correct temperature and with the proper amount of foam, ***maximizing keg yield***

By partnering with Draught Guard, the enhanced Perlick Century System will DRIVE ADDITIONAL PROFIT by:

- Creating the opportunity to extend line cleanings from 2 to 12 weeks, significantly ***reducing waste***
- Maintaining the highest draught line quality between cleanings, ***improving customer experience***

DRAUGHT GUARD UNIT

Draught Guard Units are considered a standard part of all Century systems. Each unit handles up to 12 beverage lines, regardless of the run length.

Part No.	Description	List Price
1052462	Draught Guard Unit	$3,000.00

WARNING: California Prop 65 Notice
See page 13 for details.

CENTURY SERIES POWER PAKS / ACCESSORIES

GLYCOL-READY

THE SMALLEST PROFILE ON THE MARKET, PERLICK POWER PAK CUTS DOWN ON THE SPACE REQUIRED IN THE BACK OF THE HOUSE.

CENTURY SERIES POWER PAKS FOR COPPER COOLANT LINES

- Optional 1/3, 1/2, and 3/4 HP motors at 115V and 1-1/2 HP at 230V available
- 100-gallon per hour glycol pump and stainless steel exterior
- Comes with a 6 ft. cord
- Available in air- or water-cooled with multi-pump options
- NSF listed components

NSF COMPONENT

NOTE: The max trunk length for a single 100 GPH, 125 PSIG pump is approximately 600 ft. when using Perlick pre-mixed propylene glycol (63299-1) and Perlick copper coolant trunk housing that incorporates 1/2" O.D. (3/8" ID) copper coolant lines.

NOTE: Glycol (part # 63299-1) is NOT included.
**Order two gallons for power pak bath and one gallon for every 60 ft. of trunk housing for 12 lines and under, or two gallons for every 60 ft. of trunk housing for 16, 20, and 24 lines. Century Series power paks used only with copper coolant line trunk housing.*

4404

AIR-COOLED POWER PAKS – FOR COPPER COOLANT LINES

Part No.	H.P.	Amps	Length	Depth	Height	Ship (Lbs.)	List Price
4404	1/3	15.1	24-1/2"	17-1/4"	25-1/2"	124	$6,579.00
4410	1/2	15.7	24-1/2"	17-1/4"	25-1/2"	138	$7,871.00
4410-2	1/2	21.8	24-1/2"	17-1/4"	25-1/2"	150	$8,971.00
4414	3/4	17.1	24-1/2"	17-1/4"	31"	167	$9,324.00
4414-2	3/4	22.7	24-1/2"	17-1/4"	31"	180	$10,020.00
4414-230	3/4	10.5	26-3/4"	20-1/4"	31"	174	$10,521.00
4414-230-2	3/4	13.3	26-3/4"	20-1/4"	31"	190	$11,886.00
4414-230-3	3/4	16.1	26-3/4"	20-1/4"	31"	205	$13,146.00
4420	1-1/2	21.9	26-3/4"	20-1/4"	31"	217	$15,015.00
4420-2	1-1/2	24.7	26-3/4"	20-1/4"	31"	230	$16,590.00
4420-3	1-1/2	27.5	26-3/4"	20-1/4"	31"	245	$18,060.00

WATER-COOLED POWER PAKS – FOR COPPER COOLANT LINES

Part No.	BTU	H.P.	Amps	Length	Depth	Height	Ship (Lbs.)	List Price
4410W	3,672	1/2	17.1	24-1/2"	17-1/4"	25-1/2"	136	$9,581.00
4410W-2	3,672	1/2	23.2	24-1/2"	17-1/4"	25-1/2"	150	$10,684.00
4414W	6,527	3/4	17.4	24-1/2"	17-1/4"	31"	176	$11,802.00
4414W-2	6,527	3/4	23.0	26-3/4"	20-1/4"	31"	190	$12,999.00
4414W-3	6,527	3/4	28.6	26-3/4"	20-1/4"	31"	205	$14,196.00
4420W	13,100	1-1/2	20.8	26-3/4"	20-1/4"	31"	219	$15,855.00
4420W-2	13,100	1-1/2	23.6	26-3/4"	20-1/4"	31"	235	$17,199.00
4420W-3	13,100	1-1/2	26.4	26-3/4"	20-1/4"	31"	250	$18,543.00

COOLANT CONNECTOR KIT FOR CENTURY SERIES

Includes 1-5/8" ID insulation and coolant tubing.

Part No.	Description	List Price
67803	1/2" ID SS "U"-Bend	$22.74
67804	1/2" ID SS 90° elbow	$22.74
70218	Coolant connector kit (per foot)	$22.00
63335-BFP	Coolant back flow preventer kit*	$900.00

**Use for vertical lifts over 30' to prevent power pak tank overflow.*

GLYCOL

All Power Paks require two gallons of glycol for bath and one additional gallon for every 60 ft. of trunk housing.

Part No.	Description	List Price
63299-1	Glycol premix food grade - 1 gallon	$65.21

MISCELLANEOUS POWER PAK ACCESSORIES

Part No.	Description	List Price
61468	Overflow bottle kit	$40.32
C22296A-20	Cord kit (20 amp. max) - for 4404, 4410 single pump only	$49.56
57782	Legs for power pak	$255.00
54838	Water hammer arrestor	$137.00

POWER PAK WALL MOUNTING BRACKETS

Part No.	Description	Heights	List Price
4408SS	For 1/3 and 1/2 HP power paks	39"-40"	$285.00

STAINLESS STEEL POWER PAK STAND

Part No.	Description	Heights	List Price
C21499BSS	Stand	39"-40"	$1,419.00

SECOND YEAR EXTENDED PARTS AND LABOR WARRANTY

Extends one year parts and labor warranty to two years.

Part No.	Description	List Price
730G	Second year parts and labor warranty	$290.00

STACKING MODULAR EQUIPMENT RACKS

Heavy-duty gauge steel. Durable black powder coat with a solid aluminum or galvanized shelf. 6" legs. 36" wide and 20-3/4" deep. Includes square connecting sleeves and wall brackets for units stacked up to four high. Easy to assemble.

Part No.	Description	Heights	List Price
61790A2	Dual tier	60"	$1,373.00
61790A3	Triple tier	96"	$2,112.00

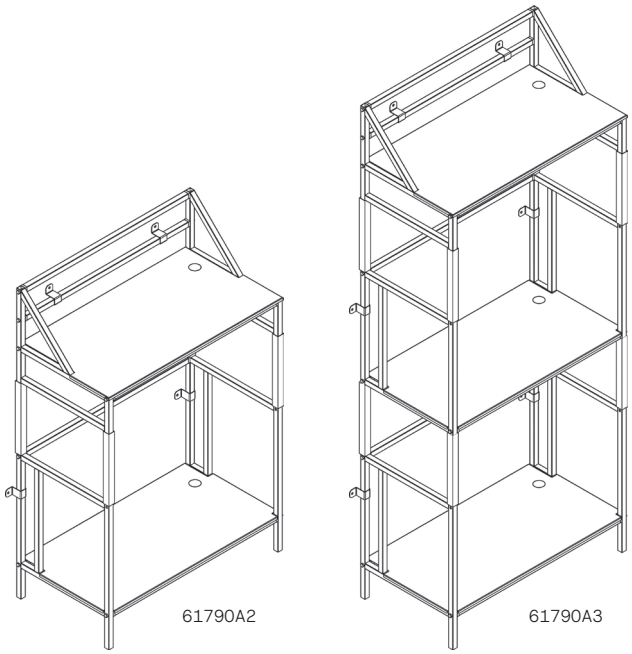

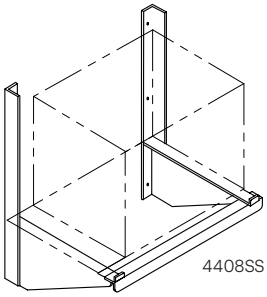

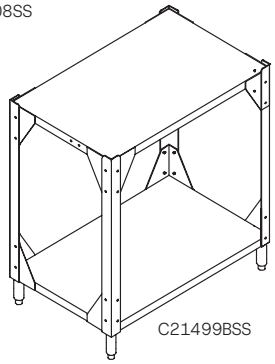

WARNING: California Prop 65 Notice
See page 13 for details.

ARCTICPOUR
Advanced Refrigeration Technology

ADVANCED REFRIGERATION SOLUTIONS FOR THE TOUGHEST CHALLENGES

WHAT TO DO WHEN IT GETS REALLY HOT?

Your cooler and Power Pak are in a really hot area, like the kitchen. Higher ambient temperatures cause your glycol chiller to work harder and less efficiently. **ArcticPOUR** allows you to move the compressor to a cooler location, where it can get proper ventilation — either inside or outside your building — lowering your energy costs and reducing stress on the equipment. The ArcticPOUR glycol bath goes inside the beer cooler away from the ambient kitchen heat so it operates more efficiently, saving energy costs.

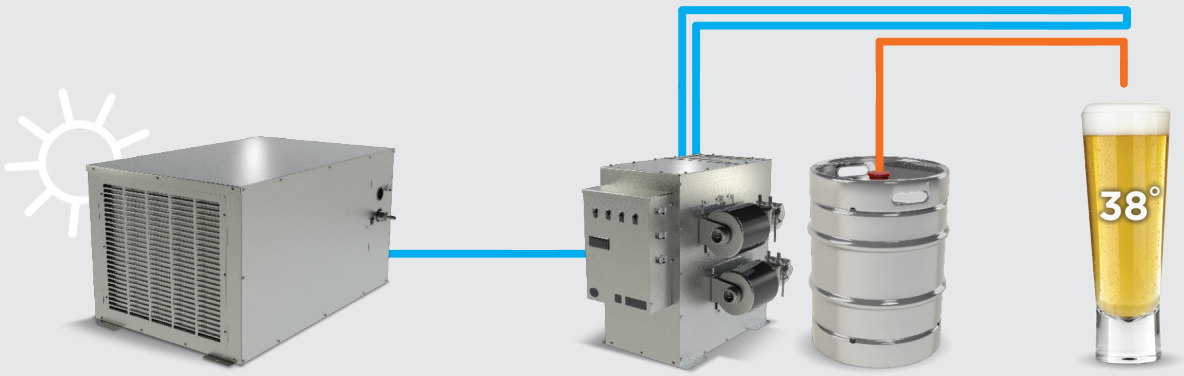

Refrigeration Deck
Installed Outdoors

Glycol Bath

38° Cooler

TPC SCOTTSDALE

SPLIT DECK POWER PAK

Certain situations present unique challenges to serving beer at its optimal temperature. For instance, there might be an excessive heat load or limited space where you need to place your power pak, or you might choose to serve macro beers and micro beers at different temperatures. That's why we invented ArcticPOUR. It's the only remote beverage dispensing system that separates the refrigeration deck from the glycol bath, up to 100 feet apart.

REFRIGERATION DECKS

Part No.	Description	List Price
RD060	3/4 H.P. Refrigeration deck	$5,226.00
RD060-C	3/4 H.P. Refrigeration deck with power cord	$5,300.00
RD060-O	3/4 H.P. Refrigeration deck with outdoor package for refrigeration deck	$5,768.00
RD120	1-1/2 H.P. Refrigeration deck	$8,513.00
RD120-O	1-1/2 H.P. Refrigeration deck with outdoor package for refrigeration deck	$9,054.00

LOWER YOUR OPERATING COSTS

Separating the refrigeration deck and the glycol bath means you can locate the compressor where it won't have to work as hard to maintain proper beer temperature. This prolongs the life of your compressor and lowers your energy costs.

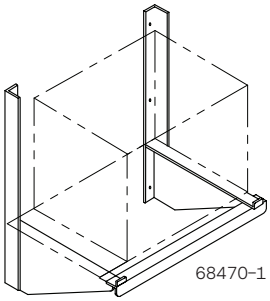

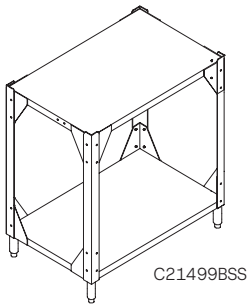

ARCTICPOUR STANDS, RACKS, AND SHELVES

Part No.	Description	List Price
C21499BSS	Stand, 35" x 22"	$1,419.00
61790	Dual tiered rack, 39" x 20-3/4" x 60"	$1,373.00
61790P1	Triple tiered rack, 39" x 20-3/4" x 96"	$2,112.00
57782	Legs, set of 4, 6" Nom	$739.00
68470-1	Wall shelf, large (RD120)	$776.00
68470-2	Wall shelf, small (RD060 or GB)	$693.00

MISCELLANEOUS ARCTICPOUR ACCESSORIES

Part No.	Description	List Price
67451	Coolant connector parts bag – refrigeration deck to glycol bath	$52.50
67451-1	Coolant connector, fabricated, per foot – refrigeration deck to glycol bath	$35.07
67451-1-IK	Insulation kit for 67451-1 coolant connector	$21.37
63299-1	Glycol solution, 1 gal.	$65.21
67803	1/2" ID SS "U" bend	$22.74
67804	1/2" ID SS 90° elbow	$22.74
70218	Coolant connector kit (per foot)	$22.00

WARNING: California Prop 65 Notice
See page 13 for details.

ArcticPOUR POWER PAKS / ACCESSORIES

GLYCOL-READY

ARCTICPOUR
Advanced Refrigeration Technology

The ArcticPOUR glycol bath goes inside the beer cooler to keep it away from ambient heat loads. This means the glycol bath doesn't have to work as hard, prolonging its life and further improving its efficiency.

GLYCOL BATH OPTIONS

SINGLE PUMP		
Part No.	**Description**	**List Price**
GB1	Glycol bath w/140 gph pump	$4,227.00
GB1-C	Glycol bath w/140 gph pump & power cord	$4,302.00

DUAL PUMP		
GB2	Glycol bath w/140 gph pump & 1-100 gph Aux. Pump.	$5,466.00
GB2-C	Glycol bath w/140 gph pump & 1-100 gph Aux. Pump w/ power cord.	$5,541.00

TRIPLE PUMP		
GB3	Glycol bath w/140 gph pump & 2-100 gph Aux. Pumps.	$6,705.00

QUAD PUMP		
GB4	Glycol bath w/140 gph pump & 3-100 gph Aux. Pumps.	$7,951.00

POUR TAPROOM, TN

McDANTIM'S TRUMIX CO2-NITROGEN BLENDER

- An extremely accurate CO2-nitrogen blender
- Available in single or double blend
- Unit preset at the factory
- Provided with shut offs and 3/8" barb connections at all inlets and outlets

Part No.	Description	List Price
MAXIMUM OF 7 KEG PER HOUR CAP.		
69900S70	Single blend 70% CO2- 30% nitrogen - 70 PSIG	$1,995.00
69900S60	Single blend 60% CO2- 40% nitrogen - 70 PSIG	$1,995.00
69900S50	Single blend 50% CO2 - 50% nitrogen - 70 PSIG	$1,995.00
69900S25	Single blend 25% CO2 - 75% nitrogen - 70 PSIG	$1,995.00
MAXIMUM OF 7 KEGS PER HOUR CAP.		
69900D7025	Double blend 70% CO2 - 30% nitrogen, 25% CO2 - 75% nitrogen - 70 PSIG	$2,783.00
69900D6025	Double blend 60% CO2 - 40% nitrogen, 25% CO2 - 75% nitrogen - 70 PSIG	$2,783.00
69900D5025	Double blend 50% CO2 - 50% nitrogen, 25% CO2 - 75% nitrogen - 70 PSIG	$2,783.00
MAXIMUM OF 26 KEGS PER HOUR CAP.		
69900S70HV	Single blend 70% CO2 - 30% nitrogen, 70-PS1G high volume - 70 PSIG	$2,625.00
69900S60HV	Single blend 60% CO2 - 40% nitrogen, 70-PS1G high volume - 70 PSIG	$2,625.00
69900S50HV	Single blend 50% CO2 - 50% nitrogen, 70-PS1G high volume - 70 PSIG	$2,625.00
MAXIMUM OF 60 KEGS PER HOUR CAP.		
69900S70SA	Single blend 70% CO2 - 30% nitrogen, 110-PS1G stadium application - 110 PSIG	$3,150.00
69900S60SA	Single blend 60% CO2 - 40% nitrogen, 110-PS1G stadium application - 110 PSIG	$3,150.00
69900S50SA	Single blend 50% CO2 - 50% nitrogen, 110-PS1G stadium application - 110 PSIG	$3,150.00
MAXIMUM OF 180 KEGS PER HOUR CAP.		
69900S70SAP	Single blend 70% CO2 - 30% nitrogen, 120-PS1G stadium application plus - 120 PSIG	$5,040.00
69900S60SAP	Single blend 60% CO2 - 40% nitrogen, 120-PS1G stadium application plus - 120 PSIG	$5,040.00
69900S50SAP	Single blend 50% CO2 - 50% nitrogen, 120-PS1G stadium application plus - 120 PSIG	$5,040.00

BEER BLAST NITROGEN GENERATOR

Four models to choose from.
All models dispense 7 kegs per hour.
All models include nitrogen generator, 30 gallon nitrogen storage tank, wall mount bracket for nitrogen generator and leak detection. UL-listed. On board PLC system that monitors timing, maintenance, runtime, leak detection and other proprietary items.
Includes 3/8" barb package for all outlets. Unit weight - 93 lbs.
Dimensions 12.5" W x 10" D x 29.5" H

Model N2G7 may be purchased without a blender or with one of 3 double blender options:

- 70% CO2/30% Nitrogen & 25% CO2/75% Nitrogen
- 60% CO2/40% Nitrogen & 25% CO2/75% Nitrogen
- 50% CO2/50% Nitrogen & 25% CO2/75% Nitrogen

60/40 blend for lager beers and 25/75 for Guinness, Boddington, etc.

Part No.	Description	List Price
N2G7	Nitrogen generator - 7 kegs/hr - no blender	$16,764.00
N2G7DB7025	Nitrogen generator - 7 kegs/hr - w/ double blender 70/30 - 25/75	$19,120.00
N2G7DB6025	Nitrogen generator - 7 kegs/hr - w/ double blender 60/40 - 25/75	$19,120.00
N2G7DB5025	Nitrogen generator - 7 kegs/hr - w/ double blender 50/50 - 25/75	$19,120.00

Part No.	Description	List Price
N2G14	Nitrogen generator w/ separate compressor - 14 kegs/hr - no blender	$28,651.00
N2G26	Nitrogen generator w/ separate compressor - 26 kegs/hr - no blender	$51,894.00
N2G60	Nitrogen generator w/ separate compressor - 60 kegs/hr - no blender	$70,055.00
N2G125	Nitrogen generator w/ separate compressor - 125 kegs/hr - no blender	$81,160.00
N2G180	Nitrogen generator w/ separate compressor - 180 kegs/hr - no blender	$124,640.00

WARNING: California Prop 65 Notice
See page 13 for details.

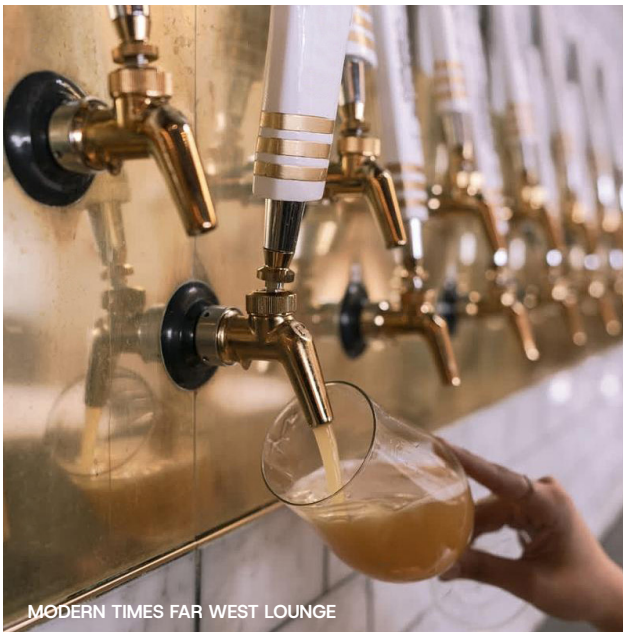
MODERN TIMES FAR WEST LOUNGE

WALK-IN COOLER DISPENSING SYSTEMS

Air-cooled systems use the already-cold air inside the beer cooler to maintain proper beer temperature all the way to the faucet. A blower mounted inside the walk-in cooler pushes cold air through one duct and returns it to the cooler in a second duct.

WHERE TO USE:

- Venues with a beer cooler that maintains a consistent temperature between 34° and 38°
- Locations where beverage towers will be within 25 ft. of the cooler and the air shaft will have a maximum of two 90 degree bends
- Locations where a maximum of 6 beverages will be served on tap

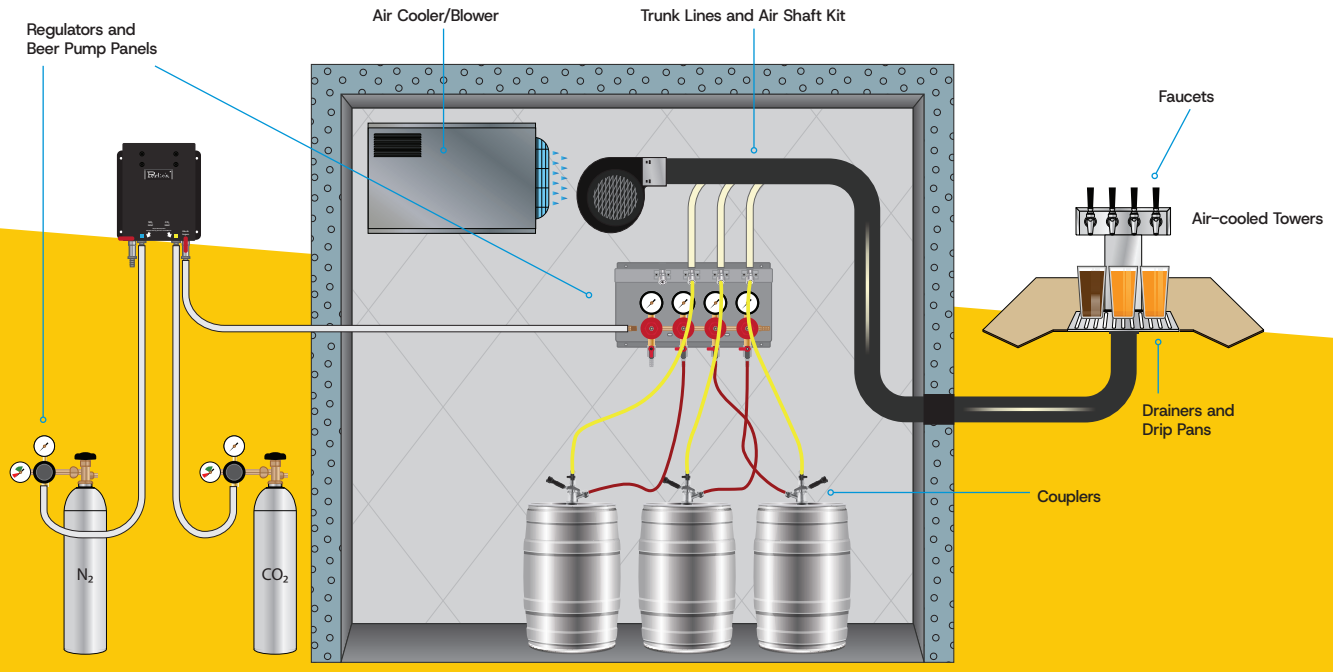

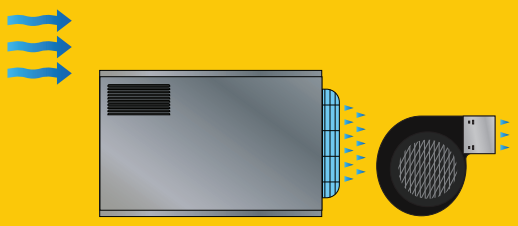

BENEFITS OF AIR-COOLED SYSTEMS:

Cost-effective

- Air-cooled systems use less energy and cost less to install and maintain
- The operator wants to offer a selection of beverages but doesn't have the budget for a glycol system

AIR-COOLED SYSTEM OPTIONS

Through-The-Wall Tapping

- Running taps directly through the cooler wall is the simplest and most cost-effective way to serve a wide beer selection
- A Perlick through-the-wall tapping kit includes everything an installer needs to run beer through the cooler wall
- The customer gets to select from the entire Perlick forward sealing faucet options
- Select the perfect shank kit for your project based on the thickness of the wall

Modular Wall Mount Dispenser

- Features seamless head in any length up to 96″ (32 faucets)
- The customer gets to select from the entire Perlick forward sealing faucet options
- Faucets shanks are 3″ on center
- Beer leads exit through the back
- Accessory glass rinser can be added to each glass rack
- Easy installation system. Heavy duty, 14-gauge mounting bracket with slotted hole mounts allows anchoring to multiple wall studs along the length of the dispensing head
- Air inlet and air outlet provide balanced air flow

SYSTEM 1 – DIRECT MOUNT
Dispenser mounts to walk-in cooler wall

SYSTEM 2 – BLIND MOUNT
Dispenser mounts to stud wall within 24″ of the inside of the walk-in cooler wall

SYSTEM 3 – LONG DRAW MOUNT
Dispenser mounts to stud wall up to 12 feet away from inside of walk-in wall with access to connections behind the wall

Dual-Duct Air Shaft System

- A dual-duct air shaft is a cost-effective dispensing system and runs 24 ft. or less
- A blower mounted inside the cooler pushes cold air through one duct and returns it to the cooler in a second duct
- The air shaft can hold up to a maximum of six product lines, and can accommodate wall-mounted and counter-mounted dispensing heads

THROUGH-THE-WALL TAPPING

AIR COOLED WALK-IN COOLER DIS-
PENSING SYSTEMS

COOLER TAPPING PRODUCTS
Dispensing beer through the cooler wall

SHANK KITS
One per faucet.

Part No.	Description	List Price
0" TO 1" WALL THICKNESS		
70027A4	4" through-the-wall shank kit for walls 0" to 1" thick	$274.00
1" TO 3" WALL THICKNESS		
70027A6	6" through-the-wall shank kit for walls 1" to 3" thick	$295.00
3" TO 5" WALL THICKNESS		
70027A8	8" through-the-wall shank kit for walls 3" to 5" thick	$316.00
5" TO 7" WALL THICKNESS		
70027A10	10" through-the-wall shank kit for walls 5" to 7" thick	$337.00
7" TO 9" WALL THICKNESS		
70027A12	12" through-the-wall shank kit for walls 7" to 9" thick	$358.00
ACCESSORIES		
63000A1	3/8" ID barrier tubing (100 ft. roll)	$1.37/ft.
C33037	One ear step-less clamp. Clamp No. 140. (.453-.551 range)	$1.47

KIT CONTAINS:

Item No.	Description	Qty.
1	Shank assembly, 304SS	1
2	Shank cover, chrome	1
3	Wall flange, black	1
4	Locking flange, beer shank	1
5	Lock nut	1
6	Restricter tube assembly	1

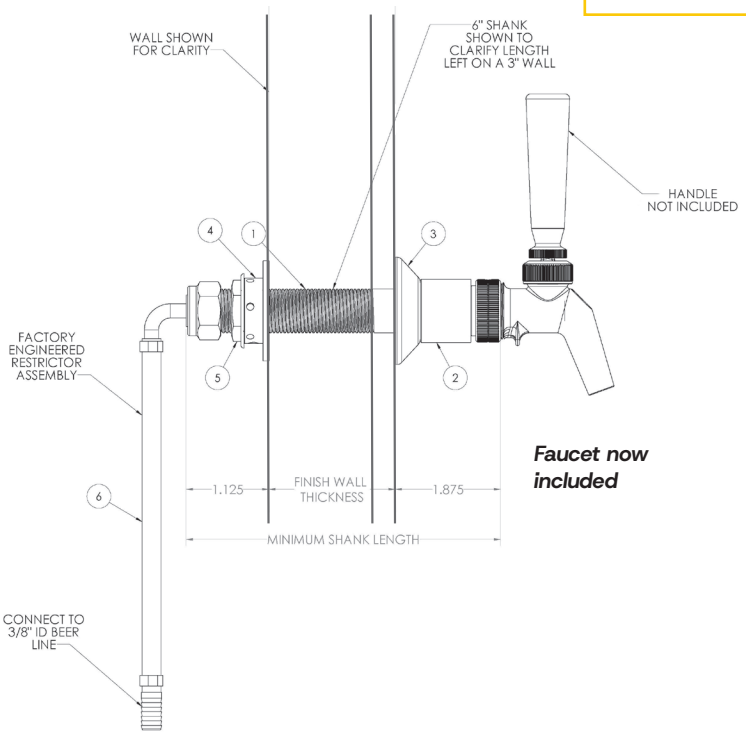

Faucet now included

WARNING: California Prop 65 Notice
See page 13 for details.

MODULAR WALL MOUNT DISPENSER – AIR COOLED

Part No.	Overall Length	No. of Faucets	No. of Glass Racks	List Price
3076-6	18″	6	1	$5,500.00
3076-7	21″	7	1	$5,800.00
3076-8	24″	8	1	$6,100.00
3076-9	27″	9	2	$6,400.00
3076-10	30″	10	2	$6,700.00
3076-11	33″	11	2	$7,050.00
3076-12	36″	12	2	$7,400.00
3076-13	39″	13	2	$7,750.00
3076-14	42″	14	2	$8,150.00
3076-15	45″	15	2	$8,550.00
3076-16	48″	16	2	$9,000.00
3076-17	51″	17	3	$9,450.00
3076-18	54″	18	3	$9,900.00
3076-19	57″	19	3	$10,400.00
3076-20	60″	20	3	$10,900.00
3076-21	63″	21	3	$11,450.00
3076-22	66″	22	3	$12,000.00
3076-23	69″	23	3	$12,600.00
3076-24	72″	24	4	$13,250.00
3076-25	75″	25	4	$13,600.00
3076-26	78″	26	4	$13,950.00
3076-27	81″	27	4	$14,300.00
3076-28	84″	28	4	$14,650.00
3076-29	87″	29	4	$15,000.00
3076-30	90″	30	4	$15,350.00
3076-31	93″	31	4	$15,750.00
3076-32	96″	32	4	$16,150.00

ROCK AND BREW CORONA

The through-the-wall tapping and modular wall mount dispensers are perfect for bars where the walk in cooler is directly adjacent to the bar space and there is clear wall space for mounting beer taps or a wall mount dispenser.

MODULAR WALL MOUNT DISPENSER

AIR COOLED WALK-IN COOLER
DISPENSING SYSTEMS

ACCESSORIES

Part No.		Description	List Price
M	Glass Rinser	Using the guide below, determine the number of glass racks. a "glass rinser" can be optionally located in the middle of each glass rack. Use an "M" to include a glass rinser or an "X" to designate NO glass rinser.	$244.00
GR-IK	Water Pressure Regulator Kit	Water pressure regulator parts bag for rinser	$120.00

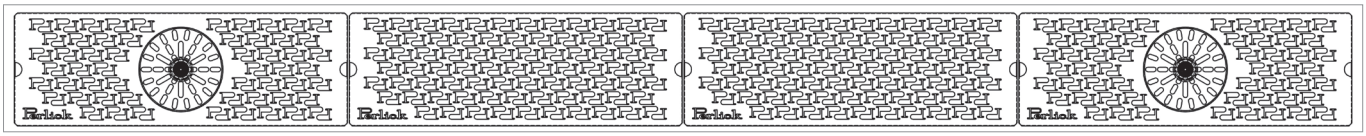

Example Glass Rinser Locations: MXXM

Model Number Key: 3076 # of Faucets M or X (Glass Rinser Options)

EXAMPLES	DESCRIPTION
3076-30MXXXM	Wall mount head, leads out the back, 30 faucets, glass rinser in rack 1, no rinser in racks 2 & 3, rinser in rack 4
3076-6X	Wall mount head, leads out the back, 6 faucets, no glass rinser

AIR-COOLED SYSTEM

A dual-duct air shaft is a cost-effective dispensing system for runs 25 feet or less. A blower mounted inside the cooler pushes cold air through one duct and returns it to the cooler in a second duct.
The air shaft can hold up to a maximum of five product lines, and can accommodate wall-mounted and counter-mounted dispensing heads.

MODULAR WALL MOUNT DISPENSER – AIR SYSTEM KITS

Air-Cooled Walk-In Cooler Dispensing Systems

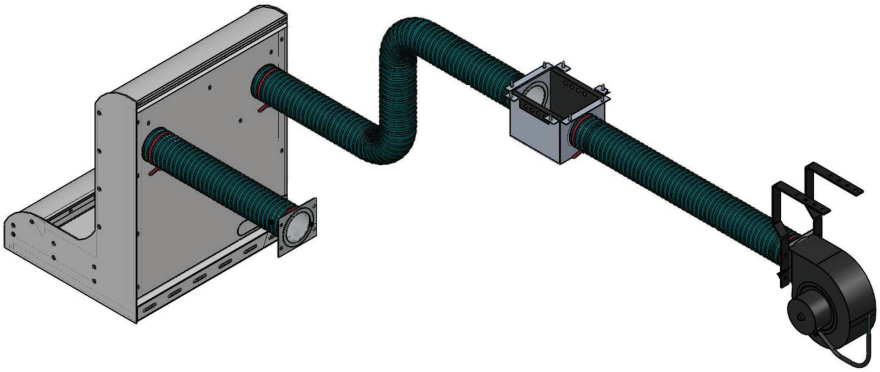

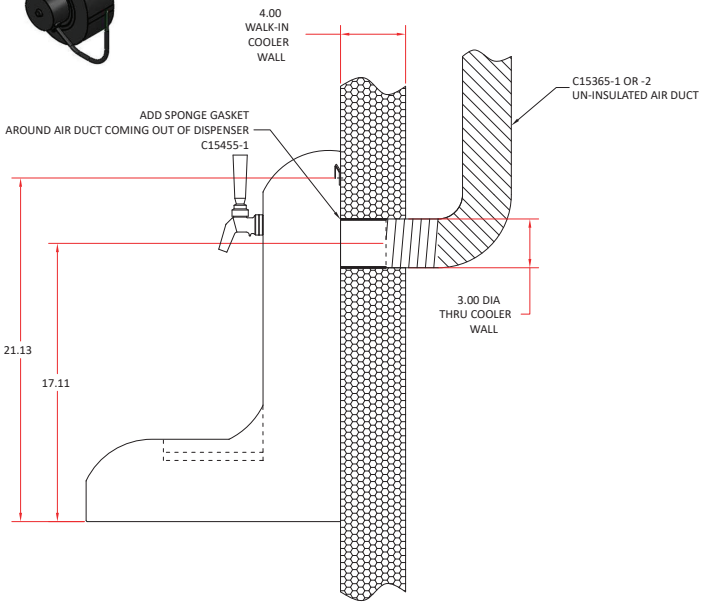

SYSTEM 1 – Direct Mount Kit with Blower

- A Modular Wall Mount Dispenser is mounted directly to the cooler wall
- These kits are also needed for other system types – *please see the following pages for other required parts for Blind Mount and Long Draw Mount Installations*
- Select from kits with 12.5 or 25 feet of hose duct based on the distance of the run inside the cooler

KIT PART NO: 1050638		List Price:
12.5 FT. AIR DUCT KIT		**$1,932.00**
Part No.	**Description**	**Qty.**
C26609	Air shaft connector	1
1655R	Blower kit, 134 CFM	1
C15365-1	12.5 Feet of 3" hose duct	1
C24715A	Hose adapter assembly 3"	1
C15455-1	Sponge sealing gasket	1
C31573	Poly housing hanger strap kit	1
C15997	Calk	1
C15366-1	Coupling air duct	1
57740A500	#10 × 1/2" Self drilling hex washer Hd w/serrations	4

Note: Dispenser sold separately.

KIT PART NO: 1050639		List Price:
25 FT. AIR DUCT KIT		**$2,205.00**
Part No.	**Description**	**Qty.**
C26609	Air shaft connector	1
1655R	Blower kit, 134 CFM	1
C15365-2	25 Feet of 3" hose duct	1
C24715A	Hose adapter assembly 3"	1
C15455-1	Sponge sealing gasket	1
C31573	Poly housing hanger strap kit	1
C15997	Calk	1
C15366-1	Coupling air duct	1
57740A500	#10 × 1/2" Self drilling hex washer Hd w/serrations	4

WARNING: California Prop 65 Notice
See page 13 for details.

MODULAR WALL MOUNT DISPENSER KITS

AIR COOLED WALK-IN COOLER
DISPENSING SYSTEMS

SYSTEM 2 – Blind Mount

- Modular Wall Mount dispenser is mounted to a stud wall less than 24" from the outside of the walk-in cooler wall
- "Blind" refers to the gap between the stud wall and outer cooler wall being too small to access
- The Blind Mount installation kit is to be used in conjunction with the 12.5 (part 1050638) or 25 foot (part 1050639) air duct kits

KIT PART NO: 1050640		List Price:
BLIND MOUNT KIT		$189.00
Part No.	**Description**	**Qty.**
63310-5	2.5" Diameter PVC pipe, 24" long	2
C27533	Tubing, Armaflex, 1/2" wall, 6 foot long	1
C24715A	Hose adapter assembly 3"	1
C15455-1	Sponge sealing gasket	1
57740A500	#10 × 1/2" Self drilling hex washer Hd w/serrations	4

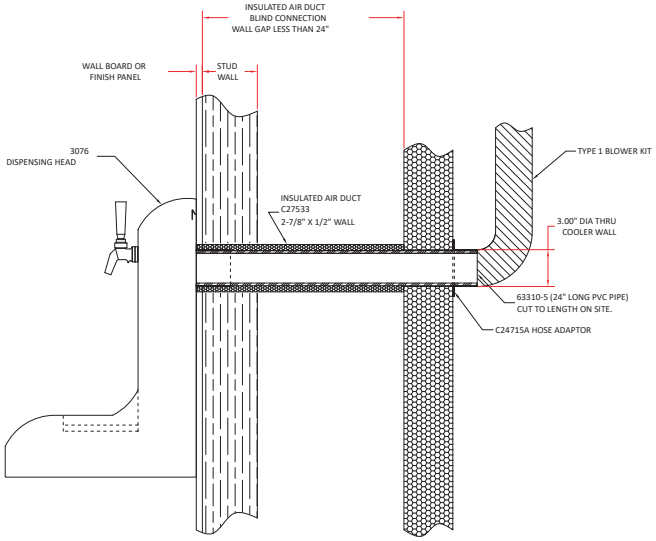

SYSTEM 3 – Long Draw Mount

- Modular Wall Mount dispenser is mounted to a stud wall greater than 24" and less than 12 feet from the outside of the cooler wall
- The Long Draw Mount installation kit is to be used in conjunction with the 12.5 (part 1050638) or 25 foot (part 1050639) air duct kits

KIT PART NO: 1050641		List Price:
LONG DRAW MOUNT KIT		$1,029.00
Part No.	**Description**	**Qty.**
C15365-2	25 feet of 3" hose duct	1
C24715A	Hose adapter assembly 3"	1
C15455-1	Sponge sealing gasket	1
57740A500	#10 × 1/2" Self drilling hex washer Hd w/serrations	4
C31810	Tubing, Armaflex, 1/2" wall, 6 foot lengths	4
C15699	6 yd roll, 2" black polytape	1

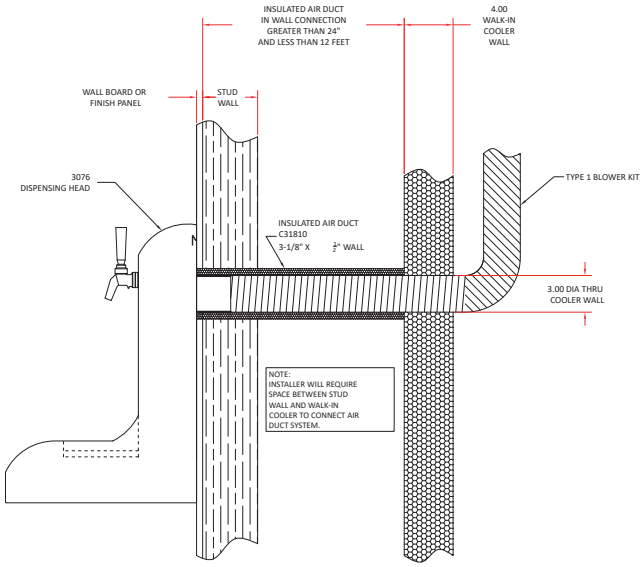

OPTIONAL ACCESSORIES

Part No.	Description	List Price
63000A1	3/8" ID barrier tubing (depends on # of products and cooler layout)	$1.37
C33037	Clamps (depends on number of products being used)	$1.47
61082-1	Aluminum housing hanger	$8.19
C24715A	Hose adapter assembly 3" (additional piece if needed)	$110.25
C15455-1	Sponge sealing gasket	$8.56
57740A500	#10 × 1/2" Self drilling hex washer Hd w/serrations	$0.15

DUAL AIR SHAFT SYSTEMS

- Counter mounted tower cooled with air shaft system connected to the walk-in cooler
- Select from kits 12 or 24 feet in length depending on the distance between the tower and cooler
- The Dual Air Shaft kits are to be used in conjunction with the 12.5 (part 1050638) or 25 foot (part 1050639) air duct kits

KIT PART NO: 1050642		List Price:
DUAL AIR SHAFT 12 FT.		$2,877.00
Part No.	**Description**	**Qty.**
3820-12	Dual air shaft, 12 ft.	1
C15392	Adhesive	1
C23907	Mounting collar	1
C24459-1	Coupling sleeve	1
C26612	90° Insulated elbow	1

KIT PART NO: 1050643		List Price:
DUAL AIR SHAFT 24 FT.		$3,644.00
Part No.	**Description**	**Qty.**
3820-24	Dual air shaft, 24 ft	1
C15392	Adhesive	1
c23907	Mounting collar	1
C24459-1	Coupling sleeve	1
C26612	90° Insulated elbow	1

OPTIONAL ACCESSORIES

Part No.	Description	List Price
63000A1	3/8" ID barrier tubing (depends on # of products and cooler layout)	$1.37
C33037	Clamps (depends on number of products being used)	$1.47
61082-1	Aluminum housing hanger	$8.19
C24715A	Hose adapter assembly 3" (additional piece if needed)	$110.25
C15455-1	Sponge sealing gasket	$8.56
57740A500	#10 × 1/2" Self drilling hex washer Hd w/serrations	$0.15

WARNING: California Prop 65 Notice
See page 13 for details.

COUNTER MOUNT DISPENSING TOWERS
DUAL AIR SHAFT SYSTEMS

AIR COOLED WALK-IN COOLER DIS-
PENSING SYSTEMS

EA2110-6B

EA2110-6BTF

TEE TOWERS – SINGLE BASE

STAINLESS STEEL

Part No.	No. of Faucets	Overall Length	Overall Height	Faucet Height	Faucet Centers	List Price
EA2110-2B	2	9-1/8″	12-15/16″	9-1/2″	5-1/2″	$915.00
EA2110-3B	3	9-1/8″	12-15/16″	9-1/2″	2-3/4″	$1,084.00
EA2110-4B	4	11-7/8″	12-15/16″	9-1/2″	2-3/4″	$1,116.00
EA2110-5B	5	14-5/8″	12-15/16″	9-1/2″	2-3/4″	$1,368.00
EA2110-6B	6	17-3/8″	12-15/16″	9-1/2″	2-3/4″	$1,558.00

POLISHED CHROME

Part No.	No. of Faucets	Overall Length	Overall Height	Faucet Height	Faucet Centers	List Price
EA2110-2BPC	2	9-1/8″	12-15/16″	9-1/2″	5-1/2″	$989.00
EA2110-3BPC	3	9-1/8″	12-15/16″	9-1/2″	2-3/4″	$1,178.00
EA2110-4BPC	4	11-7/8″	12-15/16″	9-1/2″	2-3/4″	$1,200.00
EA2110-5BPC	5	14-5/8″	12-15/16″	9-1/2″	2-3/4″	$1,484.00
EA2110-6BPC	6	17-3/8″	12-15/16″	9-1/2″	2-3/4″	$1,694.00

TARNISH-FREE BRASS*

Part No.	No. of Faucets	Overall Length	Overall Height	Faucet Height	Faucet Centers	List Price
EA2110-2BTF	2	9-1/8″	12-15/16″	9-1/2″	5-1/2″	$1,057.00
EA2110-3BTF	3	9-1/8″	12-15/16″	9-1/2″	2-3/4″	$1,270.00
EA2110-4BTF	4	11-7/8″	12-15/16″	9-1/2″	2-3/4″	$1,326.00
EA2110-5BTF	5	14-5/8″	12-15/16″	9-1/2″	2-3/4″	$1,612.00
EA2110-6BTF	6	17-3/8″	12-15/16″	9-1/2″	2-3/4″	$1,857.00

**These towers come with an increased lead time. Please contact Perlick for current lead times.*

DRAFT ARMS 3″ O.D.

POLISHED CHROME

Part No.	No. of Faucets	Overall Height	Faucet Height	List Price
EA2100-1	1	12-3/4″	9-1/2″	$568.00
EA2100-2	2	12-3/4″	9-1/2″	$679.00
*EA2100-3	3	13-3/4″	10-1/2″	$800.00

TARNISH-FREE BRASS**

Part No.	No. of Faucets	Overall Height	Faucet Height	List Price
EA2100-1TF	1	12-3/4″	9-1/2″	$781.00
EA2100-2TF	2	12-3/4″	9-1/2″	$1,073.00
*EA2100-3TF	3	13-3/4″	10-1/2″	$1,270.00

** Faucet height of center faucet is 9-1/8″ on draft arms with 3 faucets.*

***These towers come with an increased lead time.*
Please contact Perlick for current lead times.

EA2100-2

EA2100-1

EA2100-1TF

EXTRA HIGH DRAFT ARMS – 3″ O.D.

To order 3″ O.D. draft arms one or three inches higher than the standard listed above, add suffix number and additional amount to the list price for the head selected. For example, to order a one faucet draft arm that is 13-3/4″ tall, order part number EA2100-1-2. See chart below:

Suffix Number	No. of Faucets	Dispensing Head	Additional Height	Overall Height	Faucet Height	Add to List Price
2	1	3″ O.D. Draft Arm	1″	13-3/4″	10-1/2″	$105.00
4	1	3″ O.D. Draft Arm	3″	15-3/4″	12-1/2″	$116.00
2	2	3″ O.D. Draft Arm	1″	13-3/4″	10-1/2″	$105.00
4	2	3″ O.D. Draft Arm	3″	15-3/4″	12-1/2″	$116.00
2	3	3″ O.D. Draft Arm	2″	15-3/4″	12-1/2″	$105.00

WARNING: California Prop 65 Notice
See page 13 for details.

WITH FORWARD SEALING FAUCETS, YOU'LL NEVER LOOK BACK.

- 304 stainless steel construction won't pit or tarnish
- The flavor of the beverage won't be tainted
- Patented forward sealing design eliminates the need
  for a valve shaft exposed to beer and air
- Spout angle is more vertical, allowing more thorough draining after each pour
- No horizontal area for beer to collect
- NSF certified

NSF COMPONENT

650SS
Flow Control

Perlick's patented forward sealing design eliminates the need for a valve shaft exposed to beer and air.

630SS

650SS
Flow Control

FORWARD SEALING BEER FAUCETS

The 304 stainless steel forward sealing faucets provides a perfect pour every time. Easy to clean and may be cleaned in place.
Saves time and money.

Part No.	Description	List Price
630PC	Polished chrome forward sealing faucet	$55.13
630SS	Stainless steel faucet	$94.00
630SSTF	Stainless steel faucet with tarnish-free brass exterior	$102.00
650SS	Stainless steel flow control faucet	$131.25
690SS	Stainless steel flow control faucet with push-back creamer	$151.20
680SS	Stainless steel faucet with push-back creamer	$112.35

ADDITIONAL FAUCETS AND ACCESSORIES

Part No.	Description	List Price
63927	Stout and ale faucet – stainless steel body and spout	$322.00
63928	Stout and ale faucet – brass-plated stainless steel body and stainless steel spout	$322.00
308-40C	Beer faucet lock for 630 Series faucets	$144.00
63929	Sulli plug	$17.43
308-38	Black knob	$6.57
67141-1	Perlick pub handle – 7-1/2" wooden handle	$110.00

GROWLER FILLER TUBE

Fills growler from the bottom to minimize agitation.
Less foam, less pour off waste, less time to fill.

Part No.	Description	List Price
GT600	Growler filler tube	$23.68

308-40C

63929

63927

308-38

67141

Perlick's 304 Stainless Steel forward sealing beer and wine faucets are unique in both appearance and function.

- A revolutionary ball and floating front seal design prevent beer from being exposed to air
- The handle lever doesn't stick, and there is no build up of mold and bacteria in the faucet body
- Fewer internal parts mean better reliability and fewer service calls

WARNING: California Prop 65 Notice
See page 13 for details.

PERLICK® | TOBIN ELLIS

TOBIN ELLIS SIGNATURE SERIES

DRAFT COCKTAIL SYSTEM

Bar Designer and World Champion Bartender Tobin Ellis

TOBIN ELLIS is founder and principal of Studio Barmagic (est. 1997) and also proudly a veteran bartender of 30+ years who started his foodservice and hospitality career as a dishwasher in upstate New York. His work as an innovation specialist and hospitality generalist over the decades has spanned bar and beverage consulting, advertising and marketing, and most notably designing products, concepts, and spaces. Tobin is also a passionate advocate for the hospitality industry and maintains the Hospitality Relief Dashboard at *barmagic.com* that holds more than 700 relief resources for his industry. His life's work is centered around improving fellow bartenders' lives behind the wood.

Called "a shot of adrenaline" by the New York Times, Tobin was born in Silicon Valley and raised in Rochester, New York where he first made a name as a veteran high-volume bartender, 6-time national bartending champion, and world-renowned bar operations and training consultant.

Tobin's body of multi-disciplinary work has helped win a slew of accredited hospitality and design awards including a ***2019 Best Bars in America Award*** from Esquire Magazine and a ***2015 GOOD DESIGN Award*** from The Chicago Athenaeum Museum of Architecture and Design for his signature line of underbar equipment manufactured by Perlick.

ELEVATE
YOUR BEVERAGE PROGRAM

Serving craft cocktails on tap is a great way to quickly elevate your beverage program and increase revenue. **Perlick's Tobin Ellis Signature Series Draft Cocktail System** allows hotel, restaurant, and bar operators to take advantage of the efficiencies, pour cost, extended shelf lives, and consistency associated with pressurized, pre-batched, high volume craft cocktails and signature drinks. It has everything you need to get up and running, in one place.

We've solved the problem of separation or settling of ingredients that can make dispensing many types of cocktails problematic with a unique circulation system utilizing an NSF certified circulating pump and a specially designed Cornelius keg featuring extra ports for hooking up dedicated circulation beverage lines.

- Available as a direct draw, long draw, or build your own system
- Towers use 304 stainless steel components and antimicrobial PVC-free barrier tubing to protect beverage quality and flavor
- Allows for guest sampling of craft cocktails and signature drinks at a low cost
- Greatly increases speed of service, beverage revenue, and drink consistency
- Compatible with all Tobin Ellis Signature Series equipment

COCKTAIL DISPENSING

What are some of the benefits?

- Create cocktails with unparalleled consistency to replicate the same great taste every time
- Pre-batching cocktails reduces labor and increases service speed and profits
- Pressurized and refrigerated system limits spoilage that can quickly ruin "bottle-batched" cocktails
- Cocktail system allows for an easy and inexpensive retrofit of an existing bar

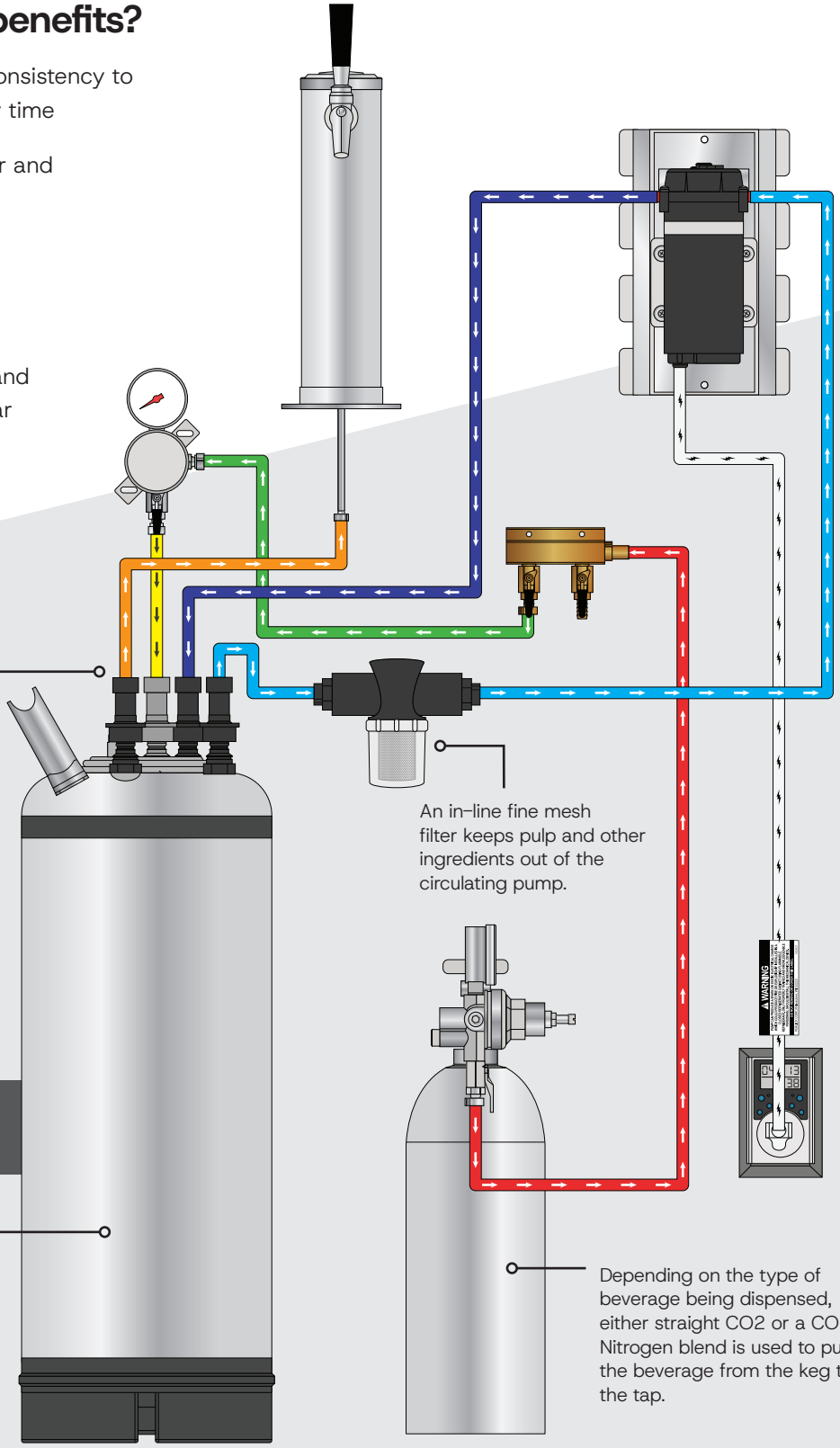

4-port keg pairs with the draft cocktail kit for fresh, thoroughly mixed, batched cocktails.

An in-line fine mesh filter keeps pulp and other ingredients out of the circulating pump.

A programmable timer allows for intermittent mixing to precisely and automatically control the amount of circulation. Perfect for carbonated cocktails, stirred cocktails like Negronis, Manhattans, and much more.

HOW IT WORKS

NSF COMPONENT

The NSF certified circulating pump draws the beverage from the bottom of the keg then through the pump via barrier tubing and returns it down a second tube back to the keg.

Depending on the type of beverage being dispensed, either straight CO2 or a CO2-Nitrogen blend is used to push the beverage from the keg to the tap.

LONG-DRAW DRAFT COCKTAIL DISPENSING KIT

Order one kit for each keg being dispensed.

Part No.	Description	List Price
KCTCLD-X	Tobin Ellis long draw cocktail dispensing kit	$900.00

KIT INCLUDES:

Part No.	Description
KCP-X	Circulating cocktail pump
KCPC	Pump parts bag including in-line filter and timer
	Gas and beverage tubing
	Mounting brackets and hardware for cocktail pump

**Circulating Cocktail Kegs ordered separately.*

NON-CIRCULATING COCKTAIL KEGS

Part No.	Description	List Price
CC2.5NAT	2.5 gallon standard non-circulating keg	$401.00
CC5NAT	5 gallon, standard non-circulating cocktail keg	$430.00
CCTCK	Parts bag for non-circulating cocktail keg	$355.00

CIRCULATING COCKTAIL KEGS

Part No.	Description	List Price
KC5	Tobin Ellis 5 gallon, circulating cocktail keg	$1,224.00
KC10	Tobin Ellis 10 gallon, circulating cocktail keg	$1,343.00

CIRCULATING DRAFT COCKTAIL COMPONENTS

Part No.	Description	List Price
KCP-X*	Tobin Ellis circulating pump for cocktail keg	$401.00
KCPC*	Tobin Ellis circulating pump connection kit cocktail keg	$175.00

**Included in KCTCLD-X*

ADDITIONAL ACCESSORIES

Part No.	Description	List Price
2925C	Primary regulator for N2, twin gauge	$288.00
2928F	Primary regulator for C02, twin gauge	$242.00
KCNT	Nitrogen cylinder, alum., 244 cu/in internal volume	$375.00
KCPS	Tobin Ellis pulp strainer for kegging cocktail mixture	$224.00

WARNING: California Prop 65 Notice
See page 13 for details.

REGULATOR PANEL KITS

Each kit includes a secondary regulator panel, keg coupler(s), air hose, beer connector(s), nuts, tailpieces, washers, and hose clamps needed to connect the air system and the product lines in the walk-in cooler.

- Panels feature a redesigned 304SS wall bracket with a 3/8″ barbed tailpiece.
- Accessory tailpieces are available to directly connect 5/16″ and 1/4″ beverage lines.
- Panels are sized and pre-drilled to receive FOBs or 2-way and 3-way Perlick manifolds, which are field installed.

LOCKING REGULATOR PANEL
With 36000G Coupler

Part No.	Description	List Price
RPK1CL	Single	$483.00
RPK2CL	Dual	$641.00
RPK3CL	Three-way	$872.00
RPK4CL	Four-way	$1,134.00

NON-LOCKING REGULATOR PANEL
With 36000G Coupler

Part No.	Description	List Price
RPK1C	Single	$457.00
RPK2C	Dual	$604.00
RPK3C	Three-way	$830.00
RPK4C	Four-way	$1,071.00

KEG COUPLERS

Part No.	Description	List Price
63907*	G System for Bass, Anchor Steam, Boddington	$243.00
63909*	A System for Warsteiner, Spaten, Paulaner	$243.00
63908*	U System for Guinness, Harp	$243.00
37500SS*	S System keg coupler, 304SS, imported bev, non-rotating probe	$158.00
36000G	Domestic "D" system, non-rotating probe, brass	$100.00
36000SS	Domestic "D" system, non-rotating probe, 304SS	$133.35
36000D	Domestic "D" system, rotating probe, brass	$124.00
40030SSLD	Domestic "D" system, lo-boy, twist handle, 304SS	$209.00
40030SSLS	Imported "S" system, lo-boy, twist handle, 304SS	$231.00

63907

63909

TAILPIECE CONVERSION PARTS BAG

Part No.	Description	List Price
67994S31-4	Tailpiece conversion parts bag, 5/16″ straight, (4) lines, 304 stainless steel	$55.00
67994S25-4	Tailpiece conversion parts bag, 1/4″ straight, (4) lines, 304 stainless steel	$55.00
67994E31-4	Tailpiece conversion parts bag, 5/16″ elbow, (4) lines, 304 stainless steel	$70.77
67994E25-4	Tailpiece conversion parts bag, 1/4″ elbow, (4) lines, 304 stainless steel	$70.77

REGULATOR PANEL KITS WITH FOBS

Each kit includes a secondary regulator panel with factory installed FOBs, keg coupler(s), air hose, beer connector(s), nuts, tailpieces, washers, and hose clamps needed to connect the air system and the product lines in the walk-in cooler.

- Factory installed FEX0208 FOBs come standard with a 304SS, 90-degree elbow, 3/8″ barbed-tailpiece. Allows for easier routing of beer lines and a cleaner looking installation.
- Accessory tailpieces are available to directly connect 5/16″ and 1/4″ beverage lines, eliminating additional adapters, splices, and clamps.
- Panels are pre-drilled for mounting 2-way and 3-way Perlick manifolds.
- The panel size and layout of the components has been optimized for maximum accessibility to simplify installation.

LOCKING REGULATOR PANEL
With Factory Installed FOB Detector and Coupler

Part No.	Description	List Price
RPKF1CL	Single	$861.00
RPKF2CL	Dual	$1,596.00
RPKF3CL	Three-way	$1,922.00
RPKF4CL	Four-way	$2,205.00

NON-LOCKING REGULATOR PANEL
With Factory Installed FOB Detector and Coupler

Part No.	Description	List Price
RPKF1C	Single	$819.00
RPKF2C	Dual	$1,523.00
RPKF3C	Three-way	$1,827.00
RPKF4C	Four-way	$2,100.00

REGULATORS

Part No.	Description	List Price
2930E	CO2-high pressure for cylinders	$279.00
43833	Nitrogen-high pressure for cylinders	$272.00
40091AHP	CO2-high pressure for bulk storage	$345.00

BEER PUMP PANEL GUARD

Part No.	Description	List Price
66573-1	1 Product beer pump panel protective guard	$163.00
66573-2	2 Product beer pump panel protective guard	$184.00
66573-3	3 Product beer pump panel protective guard	$210.00
66573-4	4 Product beer pump panel protective guard	$336.00

WARNING: California Prop 65 Notice
See page 13 for details.

BEER PUMP PANEL KITS

Each kit includes:

- A beer pump panel
- Factory installed FOBs
- Shut-off device
- Air hose, beer connector(s), CO2 vent kit
- All the fittings necessary to connect the gas system and the product lines in the walk-in cooler

Exclusive back flush feature allows cleaning solution to be pumped from faucet to coupler.

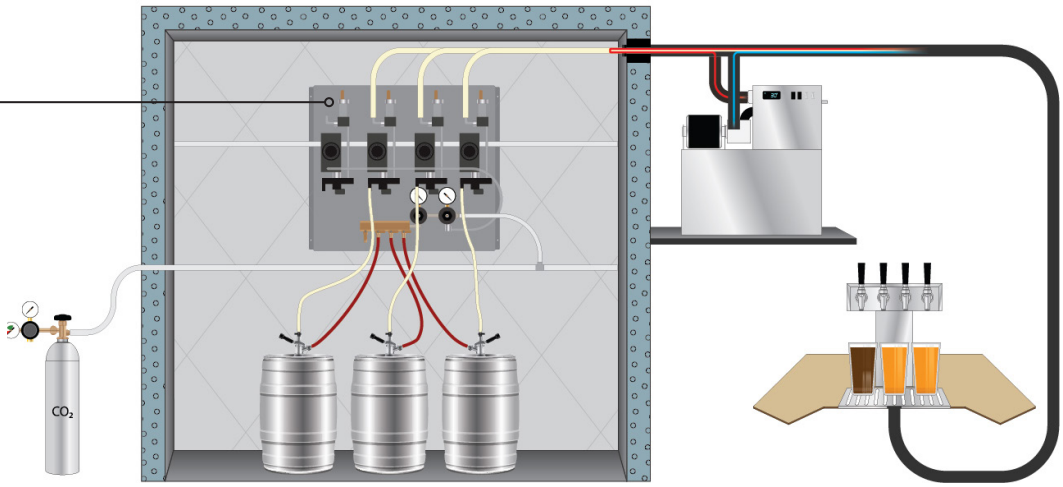

BPPKFC2L

- Factory installed FEX0208 FOBs come standard with a 304SS, 90-degree elbow, 3/8″ barbed-tailpiece. Allows for easier routing of beer lines and a cleaner looking installation.
- Accessory tailpieces are available to directly connect 5/16″ and 1/4″ beverage lines, eliminating additional adapters, splices, and clamps.
- Panels are pre-drilled for mounting 2-way and 3-way Perlick manifolds.
- The panel size and layout of the components has been optimized for maximum accessibility to simplify installation.

LOCKING REGULATOR FLOJET BEER PUMP PANEL WITH FACTORY INSTALLED FOB DETECTOR AND COUPLER

Part No.	Description	List Price
BPPKFC1L	Single	$1,302.00
BPPKFC2L	Dual	$2,100.00
BPPKFC3L	Three-way	$2,814.00
BPPKFC4L	Four-way	$3,528.00

NON-LOCKING REGULATOR FLOJET BEER PUMP PANEL WITH FACTORY INSTALLED FOB DETECTOR AND COUPLER

Part No.	Description	List Price
BPPKFC1	Single	$1,239.00
BPPKFC2	Dual	$2,006.00
BPPKFC3	Three-way	$2,683.00
BPPKFC4	Four-way	$3,360.00

CO2 DETECTOR

Kit includes: Central display unit, CO2 sensor unit, alarm unit, and quick connect with universal power supply.

Part No.	Description	List Price
63695	CO2 detecting monitor kit	$1,523.00

CO2 DETECTOR ACCESSORIES

Part No.	Description	List Price
63695-CO2	CO2 sensor with quick connect	$662.00
63695-BS	Blue strobe with quick connect	$279.00
63695-DM	Data output module	$1,428.00
63695-SPK	Sensor protector kit	$158.00

63695-CO2

63695-BS

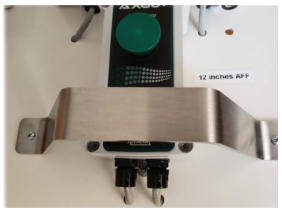

63695-SPK

IN-LINE GAS LEAK DETECTOR

Part No.	Description	List Price
67114	In-line gas leak indicator	$475.00

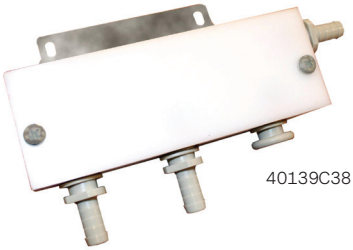

40139C38

43818-1

MANIFOLDS – TWO AND THREE OUTLETS

Part No.	Description	List Price
43818-1	3/8" U Bend "Y" fitting, 304SS	$26.20
40139C38	Manifold assembly with 3/8" output	$171.15
40139B31	Parts bag to convert manifold assembly to 5/16" output	$27.00
40139B25	Parts bag to convert manifold assembly to 1/4" output	$27.00

Note: For a 5/16" or 1/4" output, order the "Manifold Assembly" (40139C38) along with the corresponding parts bag to convert it to the desired output diameter.

FOAM-ON-BEER DETECTOR (FOB)

A foam-on-beer detector fills with foam when the keg empties and shuts off the flow of beer. This keeps solid beer in the line, eliminating foaming at the faucet and protecting your beer pumps from burnout.

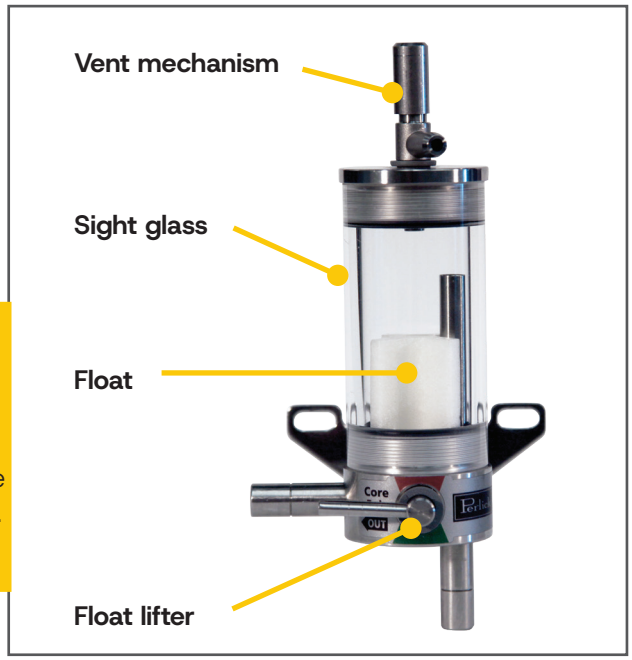

WARNING: California Prop 65 Notice
See page 13 for details.

VINYL BEVERAGE TUBING – BLACK OR TRANSLUCENT

NSF Certified / FDA Approved Materials

Sold in 100-foot reels only. Priced per foot.

1384BL 1386TR

BLACK VINYL TUBING				
Part No.	Description	100 Feet	200-400 Feet	500-Over Feet
1384BL	3/16" ID	$1.70	$1.55	$1.79
1388BL	3/8" ID	$2.25	$2.05	$2.37

TRANSLUCENT VINYL TUBING				
Part No.	Description	100 Feet	200-400 Feet	500-Over Feet
1384TR	3/16" ID	$1.70	$1.55	$1.79
1386TR	1/4" ID	$2.00	$1.80	$2.10
1387TR	5/16" ID	$2.10	$1.90	$2.21
1388TR	3/8" ID	$2.25	$2.05	$2.37
1390TR	1/2" ID	$2.50	$2.30	$2.63

VINYL ANTIMICROBIAL DRAIN TUBING

TRANSLUCENT VINYL TUBING				
Part No.	Description	100 Feet	200-400 Feet	500-Over Feet
1390D	1/2" ID	$2.85	$2.65	$2.55

AIR TUBING – RED OR TRANSLUCENT

Sold in 100-foot reels only. Priced per foot.

RED AIR TUBING				
Part No.	Description	100 Feet	200-400 Feet	500-Over Feet
1392R	5/16" ID red tubing	$2.10	$1.90	$2.21

TRANSLUCENT AIR TUBING				
Part No.	Description	100 Feet	200-400 Feet	500-Over Feet
1392TR	5/16" ID translucent tubing	$2.10	$1.90	$2.21

67289

McDANTIM CHECK VALVE TEES

Protect your McDantim Blender from filling with water. This occurs when the blender is on the same gas system as the soda carbonator and the CO2 supply fails or the carbonator doesn't have a back flow preventer.

Part No.	Description	List Price
67289	3/8" Check valve tee	$104.16
67288	1/4" Check valve tee	$99.44
67290	1/4" x 1/4" x 3/8" Check valve tee	$104.16
67291	1/4" x 3/8" x 3/8" Check valve tee	$107.10

157R2P

COUPLING WASHERS

Bulk packed or in bags of 100.

Part No.	Description	List Price 1-24	List Price 25-Over
157L2P	Leather washer	$1.11	–
157R2P	Rubber washer	$1.11	$0.75

2026

BRASS NICKEL-PLATED NUTS FOR POLY OR VINYL TUBING

Part No.	Description	List Price
2026	Hex nut	$2.89

C15179-1

C15182-1

C33040

C33041

C13090

67803

67804

STAINLESS STEEL HOSE FITTINGS

Part No.	Description	List Price
C15182-1	1/4″ x 1/4″ Hose union	$6.83
67915	5/16″ x 5/16″ Hose union	$7.04
57040	3/8″ x 1/4″ Hose union	$8.35
C15179-1	3/8″ x 3/8″ Hose union	$16.75
C13090	1/4″ x 1/4″ x 1/4″ tee	$18.27
C33040	3/8″ x 3/8″ x 3/8″ tee	$20.16
C33041	3/8″ x 3/8″ x 1/4″ tee	$20.16
C33042	1/4″ Male flare x 1/4″ hose adapter	$10.19
67803	1/2" 304SS U-bend	$22.74
67804	1/2" 304SS Elbow splicer	$22.74
67932	3/8" x 5/16" Hose union	$8.00

43818-1

BEVERAGE LINE FITTINGS

Part No.	Description	List Price 1-5	List Price 6-Over
43818-1	3/8″ Bore stainless steel U-bend Y-fitting	$26.20	$23.10
43818-2	1/4″ Bore stainless steel U-bend	$25.10	$22.80

Part No.	Description	List Price
63932	3/8″ Bore stainless steel U-bend Y-fitting, less bracket	$21.79

2372

STRAIGHT SPLICERS FOR VINYL OR POLY TUBING

Part No.	Vinyl	Poly	List Price 1-24	List Price 25-Over
30748-1	—	3/16″ to 1/4″ ID	$7.04	—
31075-1	—	3/16″ to 5/16″ ID	$7.46	$6.65
31076-1	3/16″ to 1/4″ ID	—	$6.83	$6.10
2372	3/16″ to 3/8″ ID	—	$8.19	$7.05
2373	1/4″ to 1/4″ ID	—	$8.19	$7.05
3094	1/4″ to 5/16″ ID	—	$13.34	$11.30
2374	1/4″ to 3/8″ ID	—	$8.35	$7.20
2375	3/8″ to 3/8″ ID	—	$8.35	$7.20

70173

304SS TAILPIECE FOR POLY TUBING, STRAIGHTS AND ELBOWS, BARB TO BEER THREAD

Part No.	Description	List Price 1-24	List Price 25-Over
70174	Tailpiece, 3/8" elbow	$24.89	$21.50
70173	Tailpiece, 5/16" elbow	$23.26	$20.00
70172	Tailpiece, 1/4" elbow	$23.26	$20.00
70116	Tailpiece, 3/8" straight	$14.65	$12.50
70171	Tailpiece, 5/16" straight	$14.65	$12.50
67748	Tailpiece, 1/4" straight	$4.20	—

2064-1

BRASS NICKEL-PLATED TAILPIECES FOR VINYL TUBING

Part No.	Description	List Price
2064-1	For 3/16″ ID vinyl	$4.31
2068-1	For 5/16″ ID vinyl	$3.00
2066-1	For 3/8″ ID vinyl	$4.31

WARNING: California Prop 65 Notice
See page 13 for details.

TUBING / FITTINGS

AND ACCESSORIES

POLY BEVERAGE TUBING OPAQUE

NSF Certified / FDA Approved Materials

Sold in 100-foot reels only.
Priced per foot.

		List Price	
Part No.	**Description**	**100-400 Feet**	**500-900 Feet**
6004	3/8" ID poly	$1.60	$1.68

63000A1

BARRIER TUBING

Sold in 100-foot reels only. Priced per foot.

		List Price	
Part No.	**Description**	**100-400 Feet**	**500-900 Feet**
63000A1	3/8" ID	$1.30	$1.37

C14229B

REINFORCED POLY TUBING

Sold in 100 foot reels only.

Part No.	Description	List Price Per 100 Feet
C14229B	1/4" ID	$119.00
C14230B1	3/8" ID	$273.00

C31573

67346

C15392

C24109-1

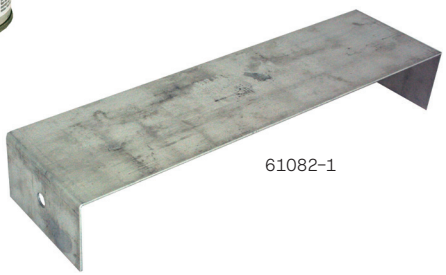

61082-1

MISCELLANEOUS FITTINGS

Part No.	Description	List Price
67346	3/8" Barbed U-Bend 304SS	$3.00
C24109-1	Stainless steel 3/8" elbow	$56.81
C31573	Poly hanger strap kit	$108.15
61082-1	Aluminum hanger bracket	$8.19
C15392	Adhesive – 1/2" pint can	$31.82

WALL BRACKETS

Part No.	Description	List Price
512A2-304SS	Wall bracket, 304SS, 3/8" inlet barb, outlet beer thread	$17.85
63634	Single 304SS stainless steel bracket 3/8" bore hose tailpiece both ends	$11.61

63634

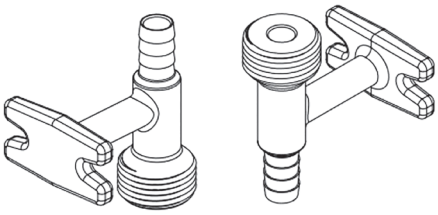

512A2-304SS

C15393 15394 C15311

TAPES

Part No.	Description	List Price
C15393	6 yd. Roll – 1/2" filament tape	$8.90
C15312	60 yd. Roll – 1/2" filament tape	$31.55
C15394	6 yd. Roll – 2" clear polytape	$17.65
C15311	36 yd. Roll – 2" clear polytape	$60.70
C15699	6 yd. Roll – 2" black polytape	$17.45
C15698	36 yd. Roll – 2" black polytape	$67.90

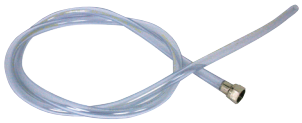

43686-72TR

552

VINYL CONNECTORS BLACK OR TRANSLUCENT

Bulk packed

Black Part No.	Description	List Price 1-5	List Price 6-Over
529	3/16" x 3-1/2'	$28.25	–
530	3/16" x 4'	$28.46	–
532	3/16" x 5'	$29.82	–
548	3/8" x 3'	$47.04	$42.50
550	3/8" x 4'	$50.00	$45.20
552	3/8" x 5'	$51.66	$47.00
554	3/8" x 6'	$54.08	$49.20
556	3/8" x 10'	$64.26	$58.40

Translucent Part No.	Description	List Price 1-5	List Price 6-Over
529TR	3/16" x 3-1/2'	$28.25	–
530TR	3/16" x 4'	$28.46	–
532TR	3/16" x 5'	$29.82	–
548TR	3/8" x 3'	$47.04	$42.50
550TR	3/8" x 4'	$50.00	$45.20
552TR	3/8" x 5'	$51.66	$47.00
554TR	3/8" x 6'	$54.08	$49.20
556TR	3/8" x 10'	$64.26	$58.40

Translucent Part No.	Description	List Price
43686-72TR	3/8" x 6' Fitting one end	$24.89
67750	Wine connector	$25.00

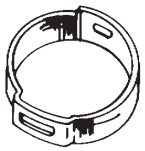

C33037

3079

ONE EAR STEPLESS CLAMP

FOR VINYL TUBING – STAINLESS STEEL

Part No.	Tubing ID	Clamp No.	List Price 1-99	List Price 100+
43805-2	3/16" ID	133	$1.42	$1.25
43805-3	1/4" ID	145	$1.42	$1.25
C31958	5/16" ID	157	$1.42	$1.25
C33010	5/16" ID	170	$1.42	$1.25

ONE EAR STEPLESS CLAMP

FOR POLY TUBING – STAINLESS STEEL

Part No.	Tubing ID	Clamp No.	List Price 1-99	List Price 100+
C33037	1/4" ID	140	$1.47	$1.20
C33053	1/4" ID bundle	105	$1.42	$1.20
C31958	3/8" ID	157	$1.42	$1.25
43805-3	3/8" ID bundle	145	$1.42	$1.25

ONE EAR CLAMP

FOR VINYL TUBING – STEEL

Part No.	Tubing ID	Clamp No.	List Price 1-99	List Price 100+
1359	3/16" ID	133	$1.32	$0.75
1360	1/4" ID	145	$1.32	$0.75
1361	5/16" ID	170	$1.32	$0.75
1362	3/8" ID	185	$1.32	$0.75
1363	1/2" ID	226	$1.32	$0.75

STAINLESS STEEL WORM DRIVE CLAMPS

Part No.	Tubing ID	List Price 1-99	List Price 100+
3079	3/16" to 3/8" ID	$2.89	$2.15
3080	3/8" to 1/2" ID	$2.89	$2.15

ONE EAR CRIMPING TOOL

Part No.	Description	List Price
1358	Pliers with cutout	$95.55
43807-1	Pliers less cutout	$82.11

1358

WARNING: California Prop 65 Notice
See page 13 for details.

TERMS AND CONDITIONS OF SALE

Please read these Terms and Conditions of Sale (these "***Terms***") carefully. These Terms materially affect the parties' obligations. Perlick Corporation, a Wisconsin corporation ("***Seller***") is bargaining for and will do business with Buyer (as defined below), as it relates to the matters contained in this Agreement (as defined below), only pursuant to these Terms. Seller's acceptance of orders for the purchase of any goods or services (together, the "***Offerings***") is expressly subject to and conditioned on the buyer of the Offerings ("***Buyer***") agreeing to these Terms.

1. **ACCEPTANCE; CONTRARY TERMS; ENTIRE AGREEMENT.** All orders for Offerings are subject to Seller's acceptance of such order at its office. Any price quotation referencing these Terms expires if not accepted by Buyer within fifteen (15) days after the date of the quotation, unless otherwise stated by Seller in such quotation. Buyer's order is accepted only pursuant to these Terms. The provisions of any purchase order or other writing inconsistent with these Terms will not constitute a part of the contract of sale. Seller's acceptance of any order for the Offerings is conditional on Buyer's agreement to these Terms. If any of these Terms are not acceptable to Buyer, Buyer shall promptly notify Seller thereof. If Seller does not receive Buyer's written objection to these Terms within ten (10) days after Buyer receives the document referencing these Terms from Seller, or if Buyer accepts delivery of any Offerings, these Terms shall be deemed irrevocably accepted in their entirety by Buyer. Seller's failure to object to provisions contained in any purchase order or communication from Buyer shall not be construed as an acceptance of any such provision or as a waiver of any term of these Terms. WITHOUT LIMITING THE FOREGOING, SELLER HEREBY EXPRESSLY OBJECTS TO ALL TERMS THAT ARE ADDITIONAL OR CONTRADICTORY TO THESE TERMS, REGARDLESS OF WHETHER SUCH TERMS ARE SPECIFIED IN ANY OTHER EMAIL, ACKNOWLEDGEMENT, PURCHASE ORDER, CONFIRMATION, OR OTHER DOCUMENT SUPPLIED BY BUYER, INCLUDING WITHOUT LIMITATION THOSE TERMS AND CONDITIONS REGARDING WARRANTY AND INDEMNITY. NO ADDITIONAL OR CONTRADICTORY TERMS WILL BE EFFECTIVE UNLESS EXPRESSLY AGREED TO IN A WRITING HAND-SIGNED BY SELLER. UPON BUYER'S RECEIPT OF AN ORDER ACKNOWLEDGEMENT FROM SELLER, BUYER'S ORDER WILL BE NON-CANCELLABLE BY BUYER UNLESS SELLER CONSENTS THERETO IN A WRITING HAND-SIGNED BY SELLER. NO ONLINE OR ELECTRONIC TERMS OR CONDITIONS OF BUYER WILL BE BINDING ON SELLER EVEN THOUGH SUCH TERMS WERE "ACCEPTED" IN ORDER TO ACCESS OR USE A SYSTEM. These Terms, together with the email, price quotation, order acknowledgement, or other similar form issued by Seller and referencing or relating to these Terms (together, this "***Agreement***") is intended by the parties to be the final expression of their agreement and are intended also as a complete and exclusive statement of the terms and conditions of the matters thereof and hereof.

2. **CHANGES; CANCELLATIONS.** Requests by Buyer for cancellation, termination, modification, suspension, or delay in shipment of Buyer's order are subject to acceptance or rejection by Seller in its sole discretion. Such requests will not be accepted on terms that do not fully indemnify and reimburse Seller against any loss associated therewith. Such indemnity must include recovery of all costs incurred, including normal indirect and overhead charges, and a normal profit. Seller generally will not approve any change to an order proposed by Buyer less than forty-five (45) days prior to shipment. Seller may cancel any Order in accordance with Section 20.

3. **SAFETY CHANGES.** Seller reserves the right to make safety changes without Buyer approval to address any actual or potential safety defect in any Offerings or changes in governmental regulations or standards. Seller shall provide notice to Buyer of any material change at the time of change and the parties shall confer and mutually agree upon any specifications changes to address any such issue.

4. **PRICES.** Unless Seller specifically agrees to hold prices open for a length of time on Seller's price quotation, all prices are subject to change without notice to Buyer and any unshipped balances on purchase orders will be invoiced to and paid by Buyer at Seller's prices in effect at the time of delivery. All prices are exclusive of freight, shipping, drayage, boxing, and crating charges, both to and from Seller's facility, and all such charges are the responsibility of, and will be paid by, Buyer. Unless otherwise specified in this Agreement, prices stated in this Agreement do not include any manufacturers, sales, use, or excise taxes, charges or duties, or any other tax, fee, or charge of any nature whatsoever imposed by any governmental authority on or measured by any transaction between Seller and Buyer, and Buyer shall pay all such amounts. In the event Seller is required to pay any of the foregoing amounts, Buyer shall reimburse Seller therefor. Prices may be increased by any increase in any of the foregoing amounts, as well as any increase in tariffs, duties, or other similar amounts, regardless of whether any such amounts were included in quoted prices. Prices stated in this Agreement may not include travel or other out-of-pocket expenses incurred by Seller in connection with the performance or delivery of the Offerings, and Buyer shall reimburse Seller for all such expenses. Seller makes no warranty with respect to price, including without limitation as to the prices charged by Seller to other buyers, and the terms of such sales. In the event Buyer purchases any Offerings consisting of finished goods, Buyer shall comply with Seller's Minimum Advertised Price Policy and Seller's Electronic Minimum Resale Price Policy, in each case as may be amended from time to time, each of which may be found on Seller's website and are hereby incorporated by reference.

5. **PAYMENT.** All payments are due in accordance with the payment terms agreed upon in writing between Buyer and Seller. If no such payment terms have been agreed upon, all payments are due in full net 30 days from the date of Seller's invoice. Seller reserves the right to require full cash payment in advance or at the time of delivery whenever Seller, in its sole discretion, develops doubt as to Buyer's financial responsibility; Seller will not in such event be liable for non-performance. Buyer shall incur a service charge if Seller receives payment after the due date, calculated as follows: one and one-half percent (1.5%) of the invoice amount if Seller receives the payment between one (1) and thirty (30) days after the due date; three percent (3%) if Seller receives the payment between thirty-one (31) and sixty (60) days after due date; and so on. In addition to all other remedies available under this Agreement or at law (which Seller does not waive by the exercise of any rights hereunder), Seller may suspend the delivery or performance of any Offerings if Buyer fails to pay any amounts when due and such failure continues for ten (10) days following such due date.

6. **SHIPMENT; RISK OF LOSS.** Unless otherwise specified in this Agreement, all shipments are F.O.B. Origin. Risk of loss will pass to Buyer at the time an Offering is loaded and the carrier signs the bill of lading or departs any Seller or partner shipping dock. All shipments shall be governed by Seller's Damage and Claims Policy in effect at the time of such shipment. Seller assumes no responsibility in connection with the shipment of the Offerings to Buyer. Title to goods that comprise the Offerings will remain with Seller until Seller receives full payment therefor. Shipping dates on any purchase order or material release order are estimates only. Seller will use reasonable efforts to meet the estimated shipping date, subject to Buyer's prompt provision of all necessary, complete and correct specifications, information and data, but Seller may not be held responsible for failure to meet such estimated date. If Buyer requires special production service for unusual shipments, an additional charge may be imposed, as agreed upon by the parties. With respect to any goods included in the Offerings, if Seller delivers up to ten percent (10%) more or less than the quantity ordered by Buyer, Buyer shall accept such delivery and pay for such excess quantities.

7. **CERTAIN BUYER OBLIGATIONS.** Buyer shall (a) cooperate with Seller in all matters relating to the Offerings and provide access to Buyer's premises, and to such office accommodations and other facilities as Seller requests for the purpose of performing or delivering any of the Offerings; (b) respond promptly to any Seller request to provide direction, information, approvals, authorizations, or decisions that Seller deems necessary in order to complete and provide the Offerings in accordance with this Agreement; and (c) provide in a timely manner such customer materials or information that Seller requests in order to complete and provide the Offerings, and Buyer shall ensure that such customer materials and information are complete and accurate in all respects.

8. **COMPLIANCE WITH LAWS.** Buyer shall comply with all applicable federal, state and local laws, regulations, orders, and ordinances. Buyer represents and warrants that Buyer is and shall at all times remain in compliance with all laws administered by the U.S. Treasury Office of Foreign Assets Control or any other governmental entity imposing economic sanctions and trade embargoes ("***Economic Sanctions Laws***") against designated countries, entities, and persons ("***Embargoed Targets***"). Buyer is not an Embargoed Target or subject to any Economic Sanctions Law, and Buyer shall not (a) directly or indirectly export, re-export, transship, or otherwise deliver Offerings or any portion of Offerings to an Embargoed Target, or (b) broker, finance, or otherwise facilitate any transaction in violation of any Economic Sanctions Law.

9. **PRODUCT RECALLS.** Seller shall reimburse Buyer for the reasonable and documented out-of-pocket costs and expenses incurred by Buyer in connection with any recall, repair, replacement or refund program which is caused by Seller's gross negligence, intentional misconduct, or breach of the limited warranties set forth in Section 10, and which is (a) deemed necessary by Seller and Buyer or (b) is mandated by an order of a governmental agency to correct a manufacturing defect affecting the safety of the Offerings sold after notification by either party to such governmental agency; provided, that Seller shall not be responsible for reimbursing Buyer for any costs and expenses incurred by Buyer if such recall, repair, replacement or refund program relates to any deficiency or deviation, material part change, or part, sub-systems, software, product, packaging or service designs, trade dress, appearance or features in the Offerings provided or specified by Buyer. In the event a recall, repair, replacement or refund program is required, (i) Buyer shall fully cooperate with Seller, at Seller's request, in the implementation and administration of any program of recall, repair, replacement or refund, and (ii) Buyer shall furnish to Seller such records regarding any program of recall, repair, replacement or refund as Seller shall reasonably request. Buyer shall notify Seller in a timely manner of any condition known to it that may affect the safety of the Offerings, and Buyer shall consult with Seller about any such condition prior to notifying any governmental agency. In no event shall reimbursement under this Section of reasonable and documented out-of-pocket costs include any amounts for lost profits or business goodwill or any other special, consequential, punitive or indirect damages. Nothing in this Agreement shall constitute a waiver or limitation by Seller of any constitutional, statutory, or other right to administrative or judicial review of any request, demand, or order of any governmental agency or body.

10. **LIMITED WARRANTY.** Seller warrants that at the time of shipment of goods or performance of services the Offerings will be free from material defects in materials and workmanship. The warranty expressly provided herein may only be asserted by Buyer and may not be asserted by Buyer's customers or other users or beneficiaries of the Offerings. THIS LIMITED WARRANTY IS EXCLUSIVE AND IS IN LIEU OF ANY OTHER WARRANTY. OTHER THAN THE FOREGOING WARRANTY, SELLER HEREBY DISCLAIMS ALL WARRANTIES WITH RESPECT TO THE OFFERINGS (WHETHER GOODS OR SERVICES) INCLUDING ANY WARRANTY OF FITNESS FOR PARTICULAR PURPOSE, TITLE, MERCHANTABILITY, AND AGAINST INFRINGEMENT OF INTELLECTUAL PROPERTY RIGHTS OF A THIRD PARTY, WHETHER EXPRESS OR IMPLIED BY LAW, COURSE OF DEALING, COURSE OF PERFORMANCE, USAGE OF TRADE, OR OTHERWISE. NO PERSON IS AUTHORIZED TO GIVE ANY OTHER WARRANTIES ON BEHALF OF SELLER OTHER THAN THOSE EXPRESSLY STATED HEREIN.

    Products manufactured by a third party ("***Third Party Product***") may constitute, contain, be contained in, incorporated into, attached to, or packaged together with the Offerings. Third Party Products are not covered by the limited warranty set forth in this Section. For the avoidance of doubt, SELLER MAKES NO REPRESENTATIONS OR WARRANTIES WITH RESPECT TO ANY THIRD PARTY PRODUCT, INCLUDING ANY WARRANTY OF MERCHANTABILITY, FITNESS FOR A PARTICULAR PURPOSE, TITLE, OR AGAINST INFRINGEMENT OF INTELLECTUAL PROPERTY RIGHTS OF A THIRD PARTY, WHETHER EXPRESS OR IMPLIED BY LAW, COURSE OF DEALING, COURSE OF PERFORMANCE, USAGE OF TRADE, OR OTHERWISE.

11. **LIMITATION OF REMEDIES AND DAMAGES.** All claims for shipping error or freight damage must be in writing and must be made in accordance with Seller's Damage and Claims Policy in effect at the time of such shipment, and must specify the quantity and condition of the Offering that was received by Buyer; failure to make any such claims within such time will be deemed to constitute Buyer's irrevocable waiver of any such claims. Seller reserves the right to accept or reject any such claim in whole or in part. If Buyer believes that any goods delivered as part of the Offerings are defective, Buyer shall notify Seller of the same in writing within thirty (30) days of Buyer's receipt thereof, and Buyer shall, at Buyer's sole cost and expense, return such Offerings to Seller within ten (10) days of Seller's written return material authorization ("***RMA***") for such return. Buyer may not return any Offerings without Seller's express written preauthorization in an RMA. Seller's liability and Buyer's sole and exclusive remedy hereunder will be limited to repair, replacement, or credit, at Seller's option, with respect to any Offerings that Seller determines in its sole discretion is actually defective. Seller will not be liable for a breach of warranty if (a) the defect arises because Buyer fails to follow Seller's oral or written instructions as to the storage, installation, commissioning, use, or maintenance of the Offering, (b) Buyer alters or repairs the Offering without the prior written consent of Seller, or (c) the Offering becomes defective or inoperative due to normal use, accident, misapplication, abuse, or misuse. SELLER WILL NOT BE LIABLE UNDER ANY CIRCUMSTANCES FOR ANY INDIRECT, INCIDENTAL, CONSEQUENTIAL, PUNITIVE, EXEMPLARY, OR SPECIAL DAMAGES, INCLUDING WITHOUT LIMITATION

ANY LOST PROFITS, COSTS OF SUBSTITUTE GOODS AND SERVICES, MACHINE WORK OR LABOR COSTS, ARISING FROM THE SALE, USE, OR INSTALLATION OF THE OFFERINGS, FROM OFFERINGS BEING INCORPORATED INTO OR BECOMING A COMPONENT OF ANOTHER GOOD, OR FROM ANY OTHER CAUSE WHATSOEVER, WHETHER BASED ON WARRANTY (EXPRESSED OR IMPLIED) OR OTHERWISE BASED ON CONTRACT, TORT, OR ANY OTHER THEORY OF LIABILITY, AND REGARDLESS OF ANY ADVICE OR REPRESENTATIONS THAT MAY HAVE BEEN RENDERED BY SELLER CONCERNING THE SALE, USE, OR INSTALLATION OF THE OFFERINGS, EVEN IF SELLER IS AWARE OF THE POSSIBILITY OF SUCH DAMAGES. IN NO EVENT WILL SELLER'S AGGREGATE LIABILITY ARISING OUT OF OR RELATED TO THIS AGREEMENT EXCEED THE TOTAL AMOUNTS PAID TO SELLER BY BUYER FOR THE OFFERINGS WITHIN THE THREE (3) MONTH PERIOD IMMEDIATELY PRECEDING THE EVENT GIVING RISE TO BUYER'S CLAIM. THE LIMITATIONS SET FORTH HEREIN SHALL BE VALID AND ENFORCEABLE NOTWITHSTANDING A FAILURE OF ESSENTIAL PURPOSE OF THE LIMITED REMEDY SET FORTH HEREIN.

12. **INTELLECTUAL PROPERTY OWNERSHIP.** All intellectual property rights, including copyrights, patents, patent disclosures, inventions (whether patentable or not), trade dress, trade names, logos, corporate names, domain names, trademarks, service marks, trade secrets, know-how, and/or other confidential information, together with all derivative works and all goodwill associated therewith, and all other rights in and to all the Offerings, documents, work product, and other materials (whether or not copyrightable) that are delivered to Buyer under this Agreement or prepared by or on behalf of Seller in the course of performing under this Agreement, shall be exclusively owned or otherwise licensed by Seller. Except as otherwise expressly and specifically provided, no license, transfer, or assignment of proprietary rights from Seller to Buyer will occur as a result of this Agreement or any order. Buyer warrants that any trademarks Buyer requests Seller to affix to any Offering is owned or authorized for use by Buyer. Buyer shall not contest, or assist others in contesting, the validity or ownership of Seller's intellectual property.

13. **TOOLS.** All dies, tools, patterns and the like involved in the manufacture of the Offerings are and will remain the property of Seller, except that any dies, tools, patterns and the like specifically ordered and paid for by Buyer ("***Buyer Tooling***") will remain the property of Buyer. Seller will return any Buyer Tooling to Buyer upon request after all amounts owed to Seller have been paid in full; provided, however, that if Buyer does not request in writing and accept delivery of the Buyer Tooling within thirty (30) days following the earlier of (a) the expiration or termination of this Agreement, (b) the conclusion of the project requiring the use of the Buyer Tooling, or (c) Seller's written request, then Seller shall thereafter own the Buyer Tooling and may use or dispose of the Buyer Tooling in Seller's sole discretion, and all of Buyer's rights in and to the Buyer Tooling shall cease and be of no further effect. Buyer is responsible for insuring all Buyer Tooling.

14. **INDEMNITY.** Buyer shall indemnify, defend, and hold Seller, its affiliates, and its and their respective directors, officers, employees, representatives, agents, customers, users, successors, and assigns harmless against all claims, damages, losses, liabilities, costs, and expenses, including all attorneys' fees, paid or incurred by Seller in connection with any claim whatsoever, including without limitation any claim of infringement of a patent, copyright, trademark, trade secret, or other proprietary right, and claims of product liability, personal injury, property damage, and product defect, which arises out of or is related to Buyer's or its direct or indirect customers' use of the Offerings, negligence, willful misconduct, violation or breach of any term of this Agreement, fraud, or violation of law, or from Buyer's specifications for the Offerings.

15. **PRODUCTION LOCATION.** Seller reserves the right to produce any order at any of its manufacturing locations unless a separate written agreement is in place between Buyer and Seller specifying a single production location.

16. **SECURITY INTEREST.** Buyer hereby grants to Seller and Seller hereby retains a lien on and a security interest in and to all of the right, title, and interest of Buyer in, to, and under the Offerings and accessories and additions thereto sold by Seller to Buyer, wherever located, whether now existing or hereafter acquired, all spare parts and components therefor, and all proceeds of the sale or other disposition including, without limitation, cash, accounts, contract rights, instruments, and chattel paper. If requested by Seller, Buyer shall execute one or more financing statements pursuant to the Uniform Commercial Code in a form satisfactory to Seller. In the event Buyer is in default under this Agreement, Seller will have the remedies of a secured party under applicable law, including without limitation the Uniform Commercial Code, and Seller may thereupon enter the premises of Buyer and remove and repossess all Offerings. The security interest granted under this Section constitutes a purchase money security interest under applicable law.

17. **SETOFF.** Seller may set off any amount due from Buyer, whether or not under this Agreement, against any amount due Buyer hereunder. Buyer may not set off any amount due from Seller, whether or not under this Agreement, against any amount due Seller hereunder without Seller's prior written consent.

18. **CONFIDENTIALITY.** All non-public, confidential or proprietary information of Seller and Seller's affiliates, customers, and suppliers, including without limitation specifications, samples, patterns, designs, plans, drawings, documents, data, business operations, customer lists, pricing, discounts, or rebates disclosed by Seller to Buyer, whether disclosed orally or disclosed or accessed in written, electronic or other form or media, and whether or not marked, designated, or otherwise identified as "confidential," in connection with this Agreement is confidential, solely for the use of performing this Agreement, and may not be disclosed or copied unless authorized by Seller in writing. Upon Seller's request, Buyer shall promptly return all documents and other materials received from Seller. Seller is entitled to injunctive relief for any violation of this Section without the necessity of proving the existence, amount, or insufficiency of damages or posting bond. This Section does not apply to information that is lawfully obtained by Buyer on a non-confidential basis from a third party without confidentiality obligations with regards to such information.

19. **SOLICITATION OF PERSONNEL.** For so long as there is any order for Offerings in effect between Buyer and Seller and for twelve (12) months thereafter, Buyer shall not solicit for employment any employee or contractor of Seller. Seller is not to be restricted from soliciting any employee, contractor, or customer of Buyer.

20. **TERMINATION.** In addition to any remedies that may be provided under these Terms or applicable law, Seller may terminate this Agreement or any Order, in whole or in part, without liability and with immediate effect upon notice to Buyer for any reason or no reason at all, including without limitation if Buyer (a) fails to pay any amount when due under this Agreement, (b) has not otherwise performed or complied with any term of this

Agreement, in whole or in part, or (c) becomes insolvent, files a petition for bankruptcy, or commences or has commenced against it proceedings relating to bankruptcy, receivership, reorganization, or assignment for the benefit of creditors.

21. **SURVIVAL.** The parties' rights and obligations, which by their nature would continue beyond the expiration or termination of this Agreement, including but not limited to those regarding indemnification, compliance with laws, warranties, limitations on liability, confidentiality, and non-solicitation of employees, will survive any termination or expiration of this Agreement.

22. **EXCUSE FROM PERFORMANCE.** Seller shall not be liable for any costs, expenses, or damages of any nature (whether general, consequential, incidental, punitive, liquidated, or otherwise) if performance or delivery of any Offering is rendered impracticable by any accident, breakdown, sabotage, riot, insurrection, war, delay, interruption in or failure of sources or subcontractors to supply materials and equipment, strike, labor or transportation problem, act of God, or other cause or condition, whether of like or different nature, that is beyond Seller's reasonable control, or orders, contracts, priorities, directives, requisitions or requests of the federal or state governments, whether or not voluntarily assumed. If any such event renders Seller's delivery or performance of any Offering impracticable, at Seller's option, (a) the date of delivery or performance shall be extended for a period equal to the time lost by reason of the delay, or (b) Seller will be excused from performance and Buyer shall promptly, upon Seller's request, pay Seller for any Offerings then completed (whether fully or partly completed).

23. **INSURANCE.** During the term of this Agreement, Buyer shall, at its own expense, maintain and carry insurance in full force and effect in amounts and types satisfactory to Seller. Upon Seller's request, Buyer shall provide Seller with a certificate of insurance evidencing Buyer's insurance coverage. Buyer shall provide Seller with thirty (30) days' advance written notice in the event of a cancellation or material change in Buyer's insurance policy. Under no circumstances will Seller be required to provide additional insured status to Buyer nor will Seller's insurer be required to waive subrogation rights against Buyer or Buyer's insurer. Seller will only be required to maintain insurance that is consistent with its own internal policies.

24. **NOTICES.** Any notice relating to this Agreement must be in writing and will be considered given within three (3) days after it is deposited, postage prepaid, with a registered mail service and addressed to the other party at the address given in this Agreement; or, if delivered by hand, when so delivered.

25. **ASSIGNMENT; DELEGATION.** Buyer may not assign, whether voluntarily or involuntarily, by merger, consolidation, dissolution, change of control, or otherwise this Agreement or any of Buyer's rights hereunder nor delegate any of Buyer's obligations under this Agreement without Seller's written consent. Any purported assignment or delegation in violation of this Section will be void. Seller may assign this Agreement and any of Seller's rights hereunder and delegate any of Seller's obligations under this Agreement. If Seller assigns this Agreement or delegates any obligations under this Agreement (whether in whole or in part), Buyer shall, as relates to such part that was assigned or delegated, release Seller from all liability under this Agreement and hold the assignee solely responsible for performance of all such assigned or delegated obligations.

26. **APPLICABLE LAW.** The validity, construction, and enforcement of this Agreement is governed by and interpreted under the laws of the State of Wisconsin, including, without limitation, its provisions of the Uniform Commercial Code. The United Nations Convention on Contracts for the International Sales of Goods (CISG) does not apply to this Agreement. Any controversy or claim arising out of or in connection with this Agreement will be settled by arbitration administered by the American Arbitration Association in accordance with its Commercial Arbitration Rules, and judgment on any award rendered by the arbitrators may be entered in any court having jurisdiction thereof. Any such arbitration will occur in Milwaukee, Wisconsin and will be conducted in the English language. Notwithstanding the foregoing, any claim by Seller for collection of unpaid amounts may be pursued through any available method and in any available venue without first proceeding to arbitration pursuant to this Section, including without limitation through litigation in the State or Federal courts located in the State of Wisconsin, and Buyer hereby irrevocably submits to the personal jurisdiction of such courts. Buyer shall pay Seller any collection fees and all attorneys' fees incurred by Seller in enforcing this Agreement or defending against any claim for breach of this Agreement.

27. **AMENDMENT; WAIVER.** No amendment or modification of any term or condition will be valid or binding upon Seller unless approved by Seller in a writing hand-signed by Seller. Unless Seller expressly indicates otherwise in such hand-signed writing, such modification is effective only in that instance and only for the purpose for which it is made and is not to be construed as a modification on any future occasion or of any future order or agreement. Clerical and stenographic errors are subject to correction by Seller. No waiver by Seller of any of the terms of this Agreement is effective unless explicitly set forth in a writing signed by Seller. The failure of Seller to insist upon a strict performance of any term of this Agreement will not be considered as a continuing waiver of any such term or condition, or any other term or condition, or any of Seller's rights. No failure to exercise, or delay in exercising, any right, remedy, power, or privilege arising from this Agreement operates, or may be construed, as a waiver thereof. No single or partial exercise of any right, remedy, power, or privilege hereunder precludes any other or further exercise thereof or the exercise of any other right, remedy, power, or privilege.

28. **SEVERABILITY**. If any term of this Agreement is held by a court of competent jurisdiction to be invalid, illegal, or unenforceable, such determination will not affect the remainder of this Agreement, which will remain in full force and effect.

29. **INDEPENDENT CONTRACTORS.** The relationship between the parties is that of independent contractors. Nothing contained in this Agreement may be construed as creating any agency, partnership, joint venture, or other form of joint enterprise, employment, or fiduciary relationship between the parties. No party has the authority to contract for or bind the other party in any manner whatsoever.

30. **NO THIRD-PARTY BENEFICIARIES.** This Agreement is for the sole benefit of the parties hereto and their respective successors and permitted assigns, and nothing herein, express or implied, is intended to or will confer upon any other person or entity any legal or equitable right, benefit, or remedy of any nature whatsoever under or by reason of this Agreement.

CENTURY FACTORY ENGINEERED PERFORMANCE GUARANTEE

Century beverage systems offer superior tower construction, faucets and cooling technology. Our systems are factory engineered, installed by a certified installer, and backed by a Certified Century Performance Guarantee ensuring customers receive the perfect pour from Perlick.

1. Limited Warranty. Perlick warrants to buyer that:

(a) Every Perlick Century System ("Century System") Factory Designed, Engineered, and Restricted, will ensure that beer

(i) is poured with a CO2 content as packaged by the brewer +/-0.2 vol/vol;

(ii) pours clear at a flow rate of 124 oz/min +/- 5 oz/min; or 2 oz/sec

(iii) pours at 38 degrees Fahrenheit, +/- 2 degrees when the cooler is maintained at a constant 36 degrees +/- 2 degrees Fahrenheit

(iv) produces a 3/4" to 1" foam head when poured in a manner consistent with Brewers Association best practices using Beer Clean Glassware (BCG as defined below), will (collectively, ***"Specifications"***).

(b) For a period of one (1) year from the date of installation of the Century System (the ***"Warranty Period"***), the Century System will materially conform to the specifications as of the date of installation and will be free from significant defects in material and workmanship.

(c) For a period of one (1) year from the date of installation, any defective part of a Century System will be replaced at no charge to buyer, FOB Perlick's factory.

(d) For a period of one (1) year from the date of installation, Perlick will pay for the cost of any labor required to repair or replace any defective Century System at standard rate.

2. Warranty Limitations. The warranties under Section 1 do not apply where the Century System has:

(a) Been installed by anyone other than the Certified Perlick Installer, per Perlick's quotation.

(b) Been subjected to abuse, misuse, neglect, negligence, accident, improper maintenance, improper storage, improper handling, abnormal physical stress, abnormal environmental conditions or use contrary to any instructions issued by Perlick or the Certified Perlick Installer, including without limitation, failure to maintain the Century System according to industry standards including proper line cleaning and Power Pak condenser cleaning; and seasonal shut downs and startups per Perlick specifications.

(c) Been reconstructed, serviced, repaired, or altered by anyone other than the original Certified Perlick Installer; or

(d) Been used with any third-party product, hardware or product that has not been previously approved in writing by Perlick.

3. Brewers Association Best Practices. For purposes of this Performance Guarantee, Brewers Association best practices for pouring beer are as follows:

(a) Place standard beer-clean pint glass free of visible soil, marks, and foam killing residues or lingering aromatics glass at 45° angle, one inch below faucet. Glassware temperature should be 41 degrees Fahrenheit +/- 3 degrees

(b) Do not let glass touch faucet. Open faucet.

(c) After glass is half full, gradually bring glass to upright position.

(d) Let remaining beer run straight down the middle. This ensures proper release of CO2, resulting in a 3/4″ to 1″ foam head.

(e) Close the faucet completely and quickly.

4. **Buyer's exclusive remedy for defective Century System.** This Performance Guarantee contains buyer's exclusive remedy for defective Century System performance. Buyer's remedy under this Performance Guarantee is conditioned upon buyer's compliance with its obligations under section 4(a) and 4(b) below. During the warranty period, with respect to any alleged defective performance of the Century System:

(a) Buyer shall notify Perlick, in writing, of any alleged claim or defect within 10 business days from the date buyer discovers, or upon reasonable inspection should have discovered, such alleged claim or defect (but in any event before the expiration of the applicable warranty period)

(b) Buyer shall make the Century System available for inspection and testing by Perlick

(c) If Perlick's inspection and testing reveals, to Perlick's reasonable satisfaction, that such Century System is defective, and any such defect has not been caused by or contributed to by any of the factors described under Section 2, Perlick shall in its sole discretion, and at its expense:

(i) repair or replace such Century System

(ii) credit or refund the price of such Century System, less any applicable discounts, rebates or credits; and

(d) Buyer has no right to return for repair, replacement, credit, or refund any Century System except as set forth in this paragraph. In no event shall buyer reconstruct, repair, alter, or replace any Century System, in whole or in part, either itself or by or through any third party, or this performance guarantee shall be void and not in effect.

(e) THIS PERFORMANCE GUARANTEE SETS FORTH THE BUYER'S SOLE AND EXCLUSIVE REMEDY AND PERLICK'S ENTIRE LIABILITY FOR ANY BREACH OF THE LIMITED WARRANTY SET FORTH IN SECTION 1.

5. **Disclaimer.** EXCEPT FOR THE EXPRESS WARRANTIES SET FORTH IN Section 1, PERLICK MAKES NO WARRANTY WHATSOEVER WITH RESPECT TO THE CENTURY SYSTEM, INCLUDING ANY

(a) WARRANTY OF MERCHANTABILITY;

(b) WARRANTY OF FITNESS FOR A PARTICULAR PURPOSE

(c) WARRANTY AGAINST INFRINGEMENT OF INTELLECTUAL PROPERTY RIGHTS OF A THIRD PARTY; WHETHER ARISING BY LAW, COURSE OF DEALING, COURSE OF PERFORMANCE, USAGE OF TRADE, OR OTHERWISE.

6. **No Liability for Consequential or Indirect Damages.** NEITHER PERLICK NOR ITS REPRESENTATIVES IS LIABLE FOR CONSEQUENTIAL, INDIRECT, INCIDENTAL, SPECIAL, EXEMPLARY, PUNITIVE OR ENHANCED DAMAGES, LOST PROF ITS OR REVENUES OR DIMINUTION IN VALUE, ARISING OUT OF OR RELATING TO ANY BREACH OF THIS PERFORMANCE GUARANTY OR BREACH OF WARRANTY, REGARDLESS OF

(a) WHETHER SUCH DAMAGES WERE FORESEEABLE

(b) WHETHER OR NOT PERLICK WAS ADVISED OF THE POSSIBILITY OF SUCH DAMAGES AND

(c) THE LEGAL OR EQUITABLE THEORY (CONTRACT, TORT, OR OTHERWISE) UPON WHICH THE CLAIM IS BASED, AND NOT WITH STANDING THE FAILURE OF ANY AGREED OR OTHER REMEDY OF ITS ESSENTIAL PURPOSE.

MAKE A LASTING IMPRESSION

A beverage tower with the timeless appeal of quality and fine craftsmanship makes a statement that contributes to an unforgettable guest experience. Only Perlick brings these traits to the towers at the heart of your entertainment venue. We combine the artisan's touch with the engineer's skill to build the most beautiful, most memorable, and most profitable dispensing towers money can buy – guaranteed.

GO AHEAD. BUILD SOMETHING MEMORABLE.
WE'LL HELP YOU DO IT.

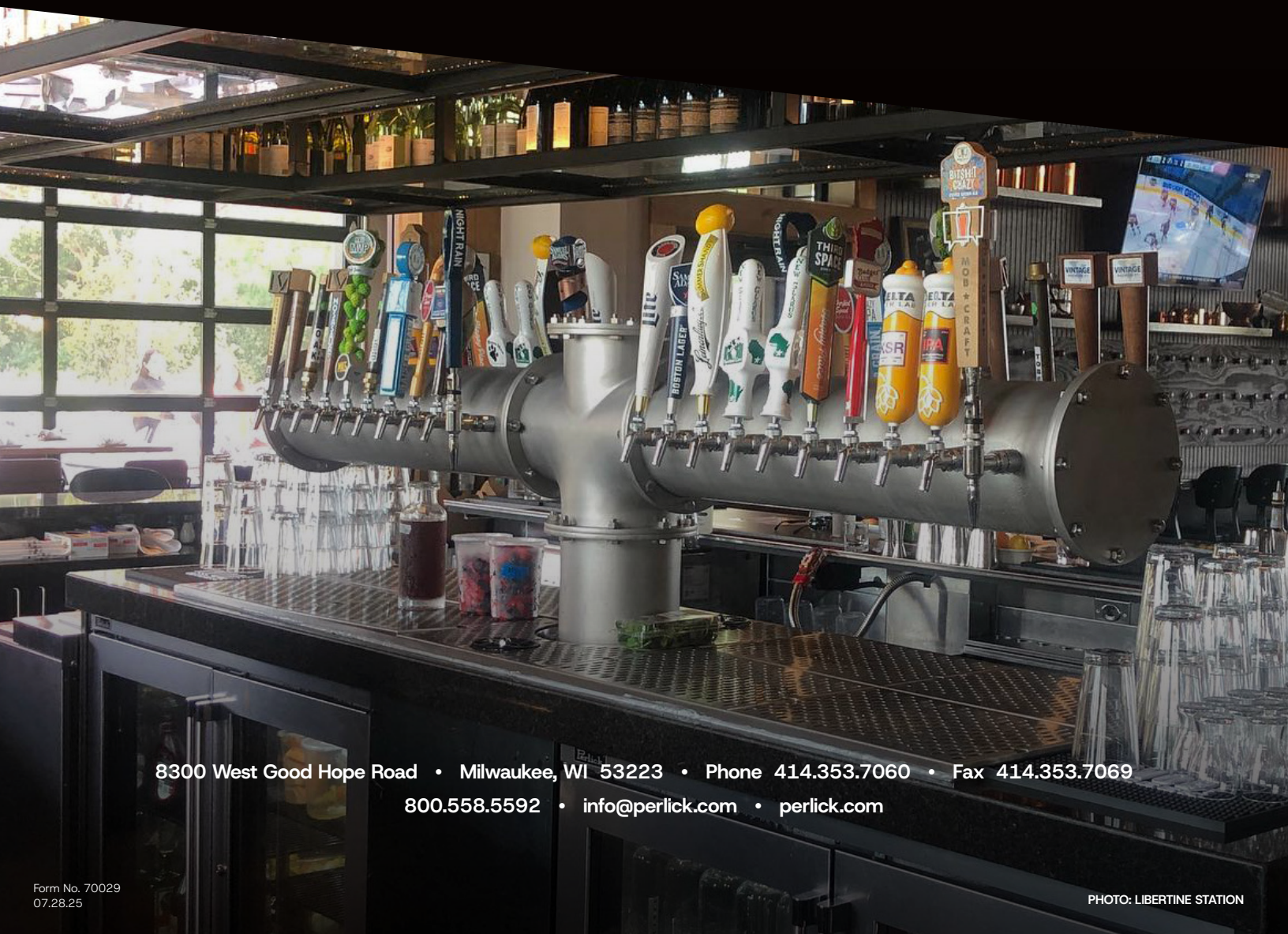

8300 West Good Hope Road • Milwaukee, WI 53223 • Phone 414.353.7060 • Fax 414.353.7069
800.558.5592 • info@perlick.com • perlick.com

Form No. 70029
07.28.25

PHOTO: LIBERTINE STATION